ARIZONA

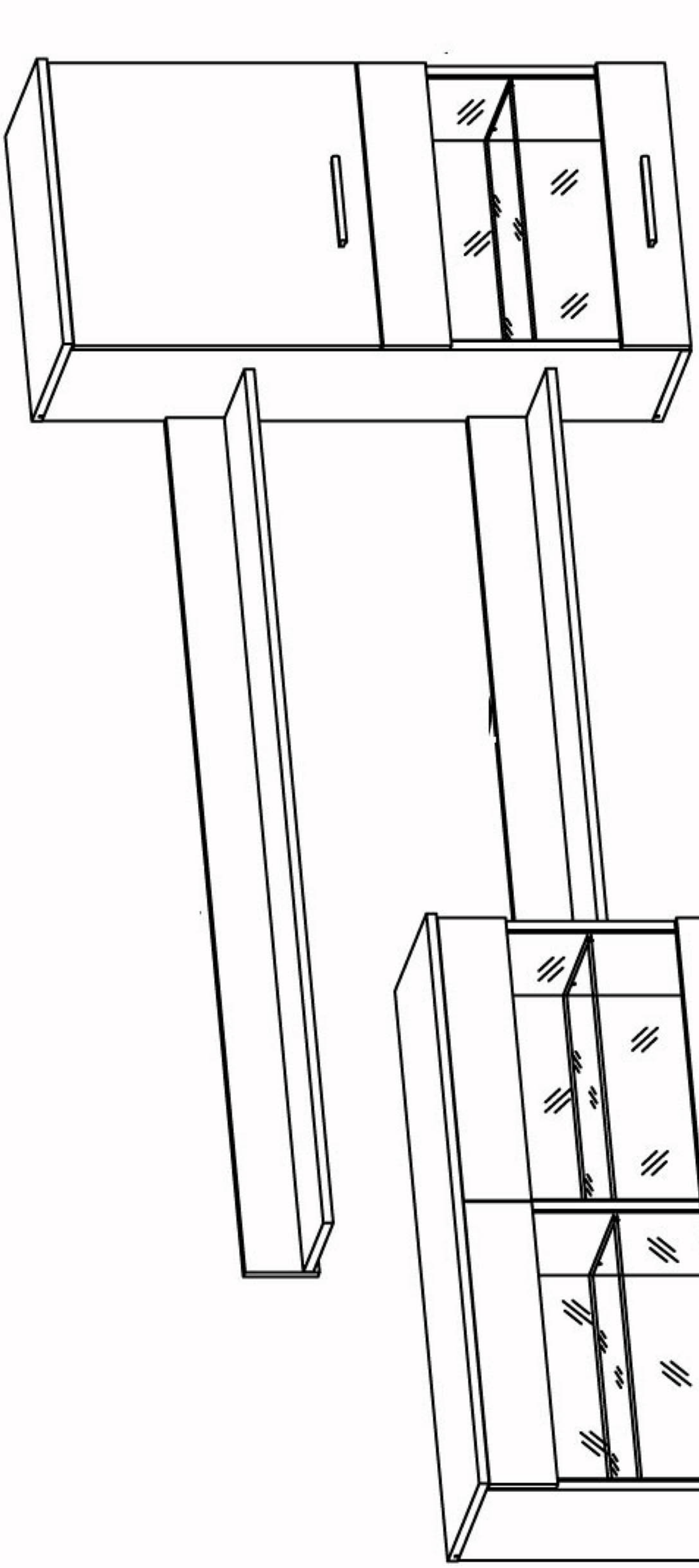

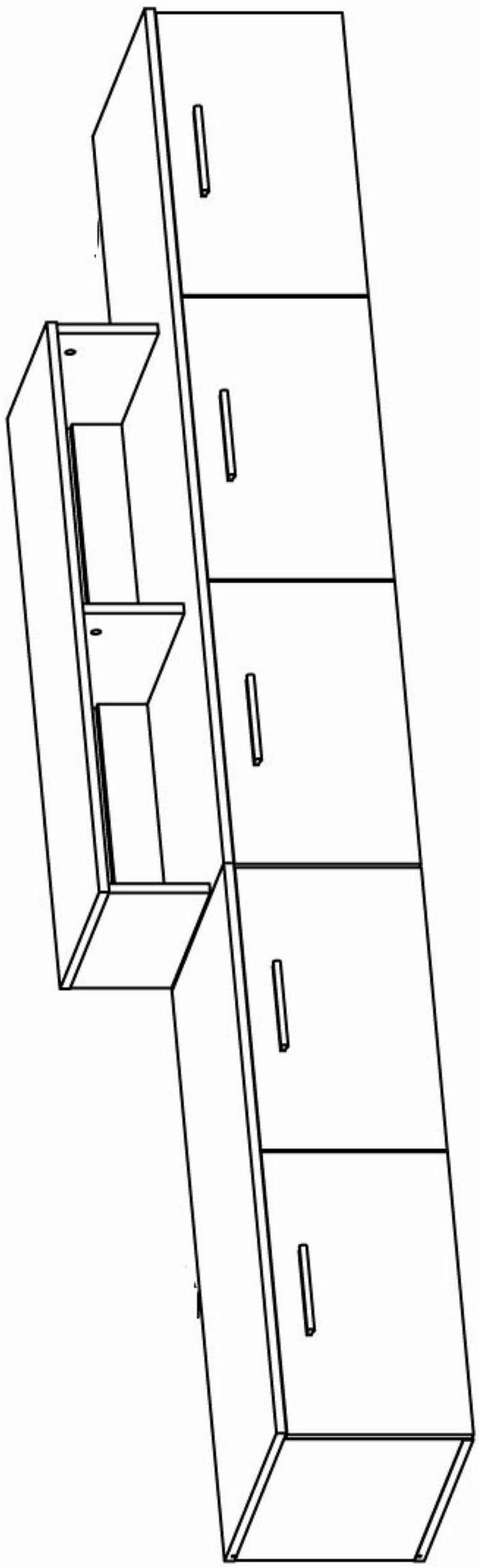

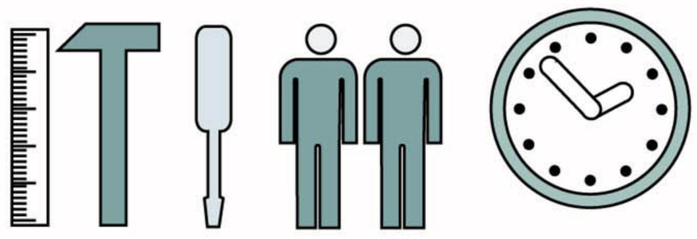

420’

TYP30

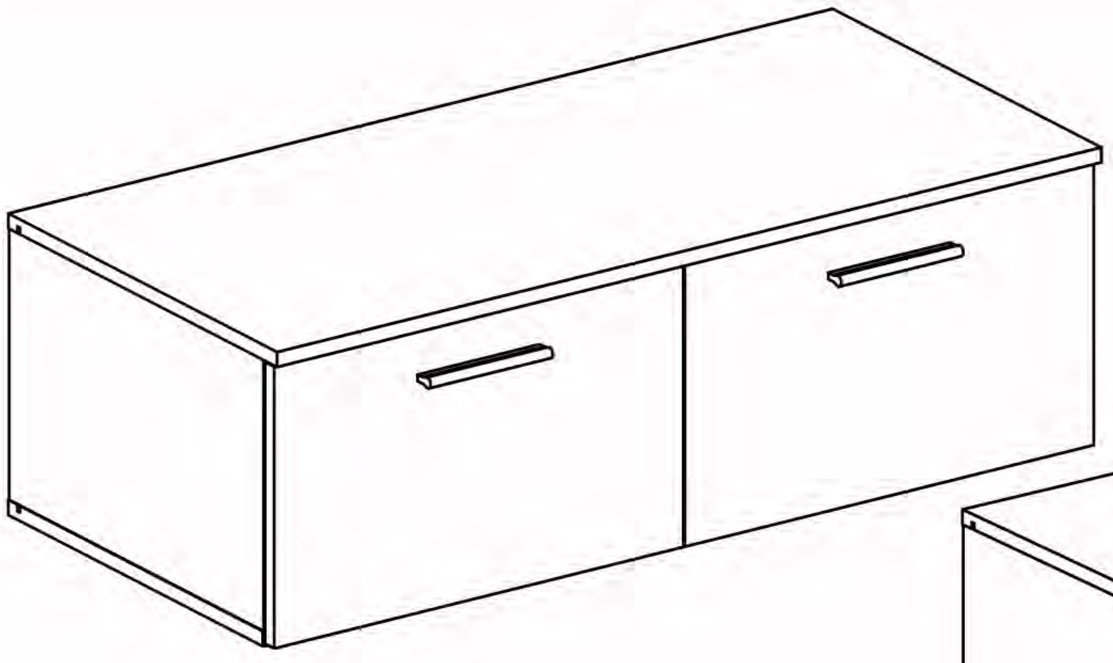

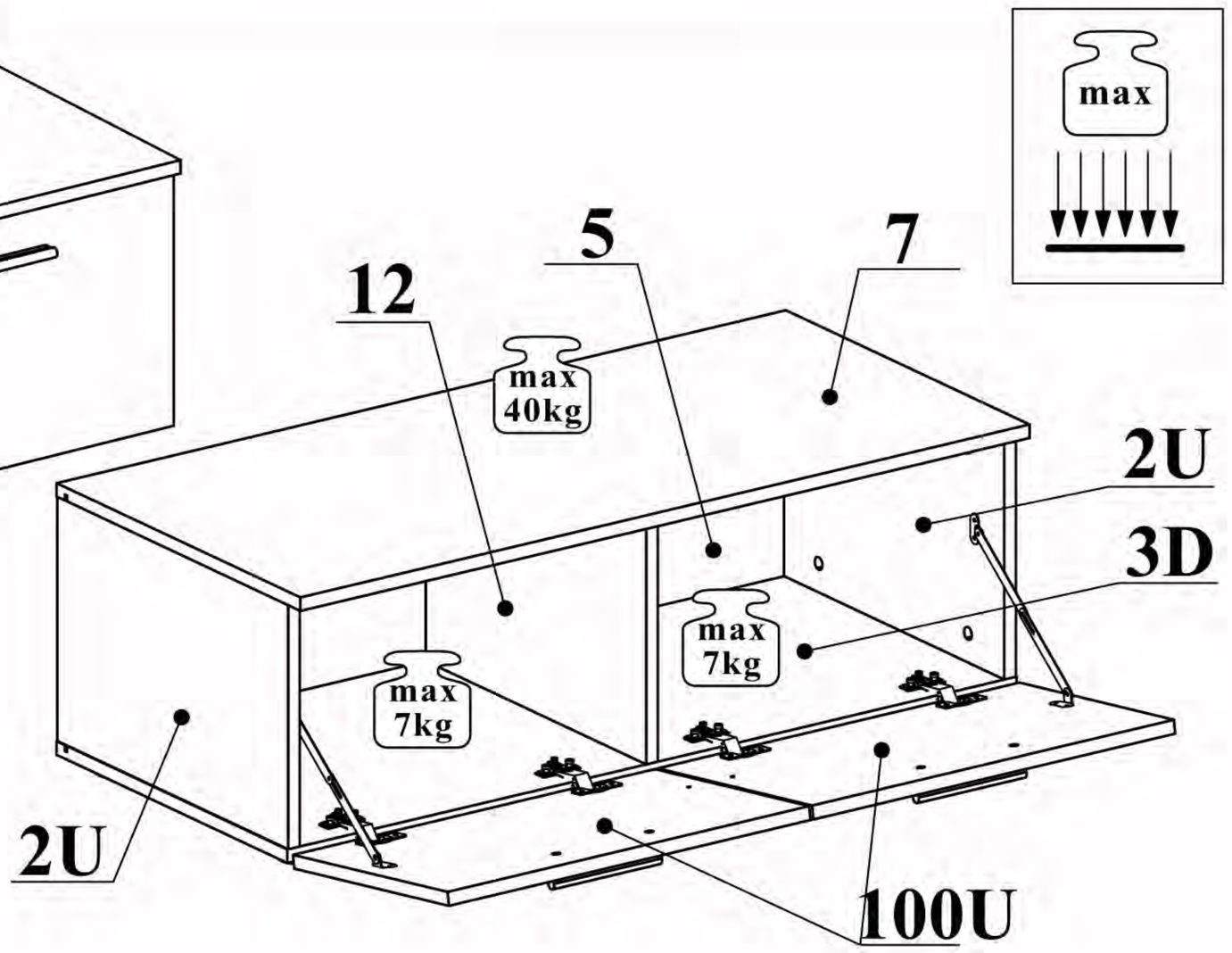

A1	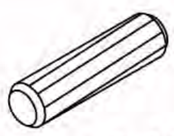	X12
B4	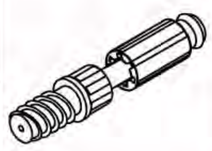	X12
B5		X12
G5		X12
I11	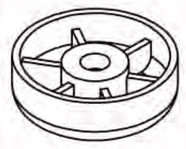	X5
D11	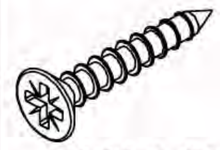	X5
E21	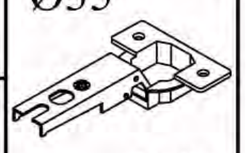	X4
E2	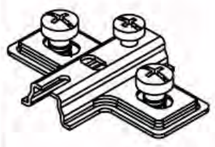	X4
D10	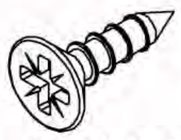	X18
OSZ	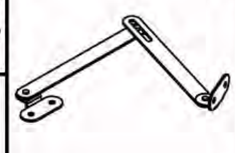	X2
KL	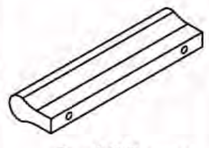	X2
UP6	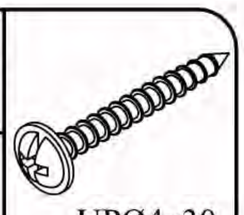	X4
S1	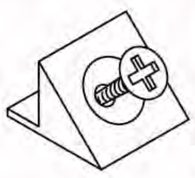	X8
L1	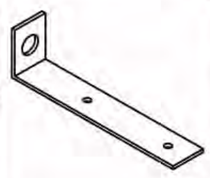	X1
KR1	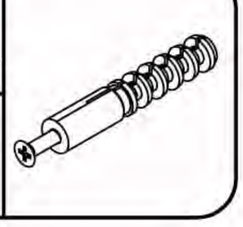	X1
G2		X1

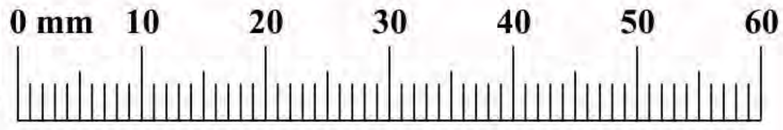

NO	Dim.		Col.-No	Qty
100U	496	299	1	2
2U	290	445	1	2
12	290	425	1	1
3D	1000	445	1	1
5	978	302	1	1
7	1000	470	1	1

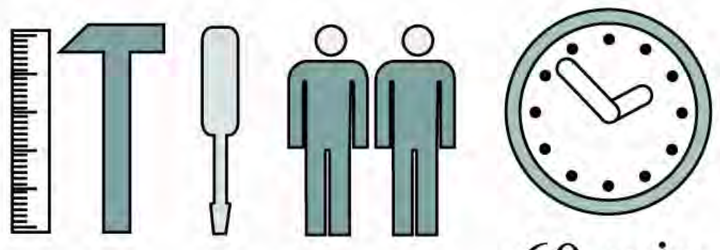

TYP 30 LOGO 3

1

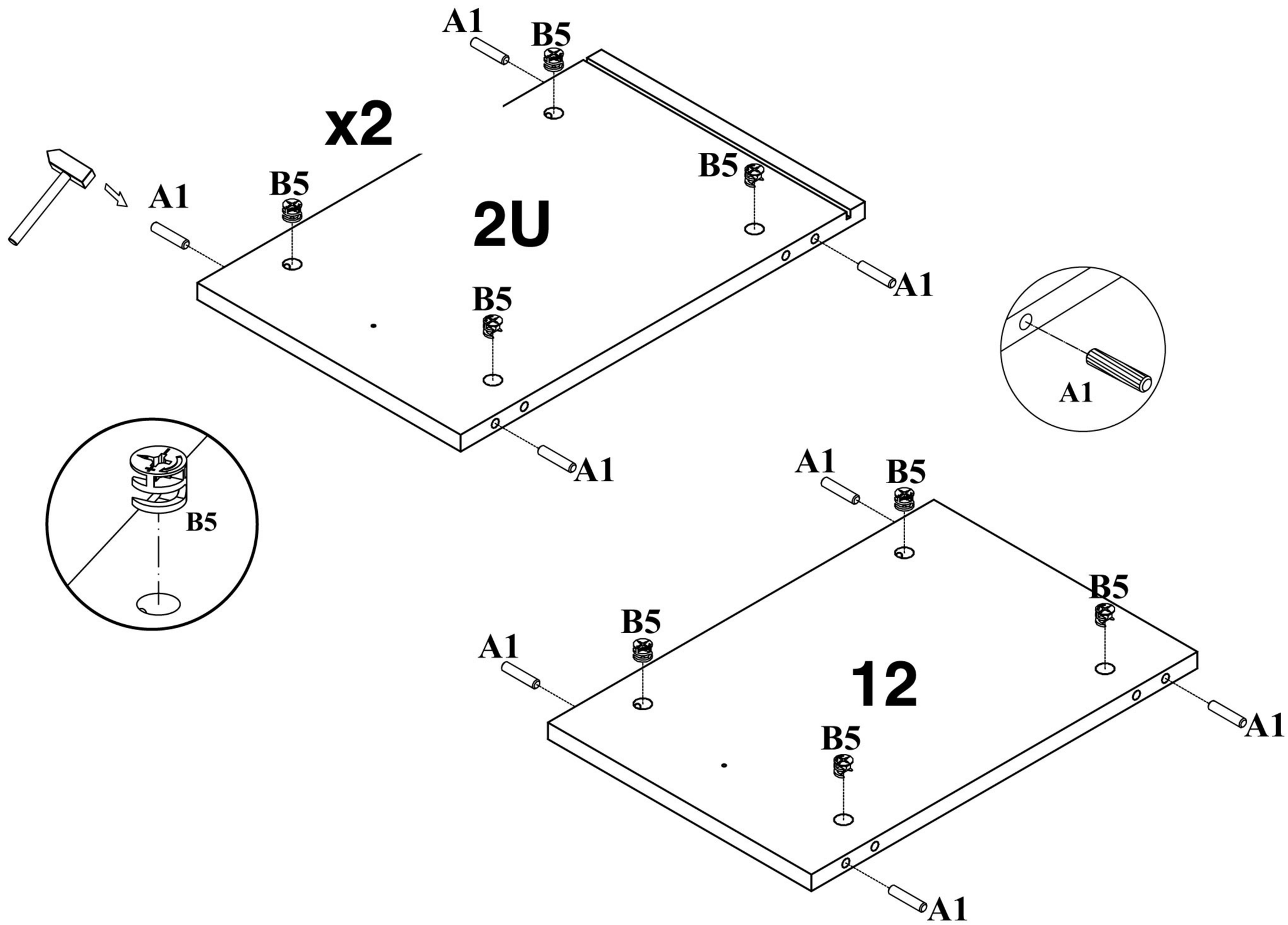

2

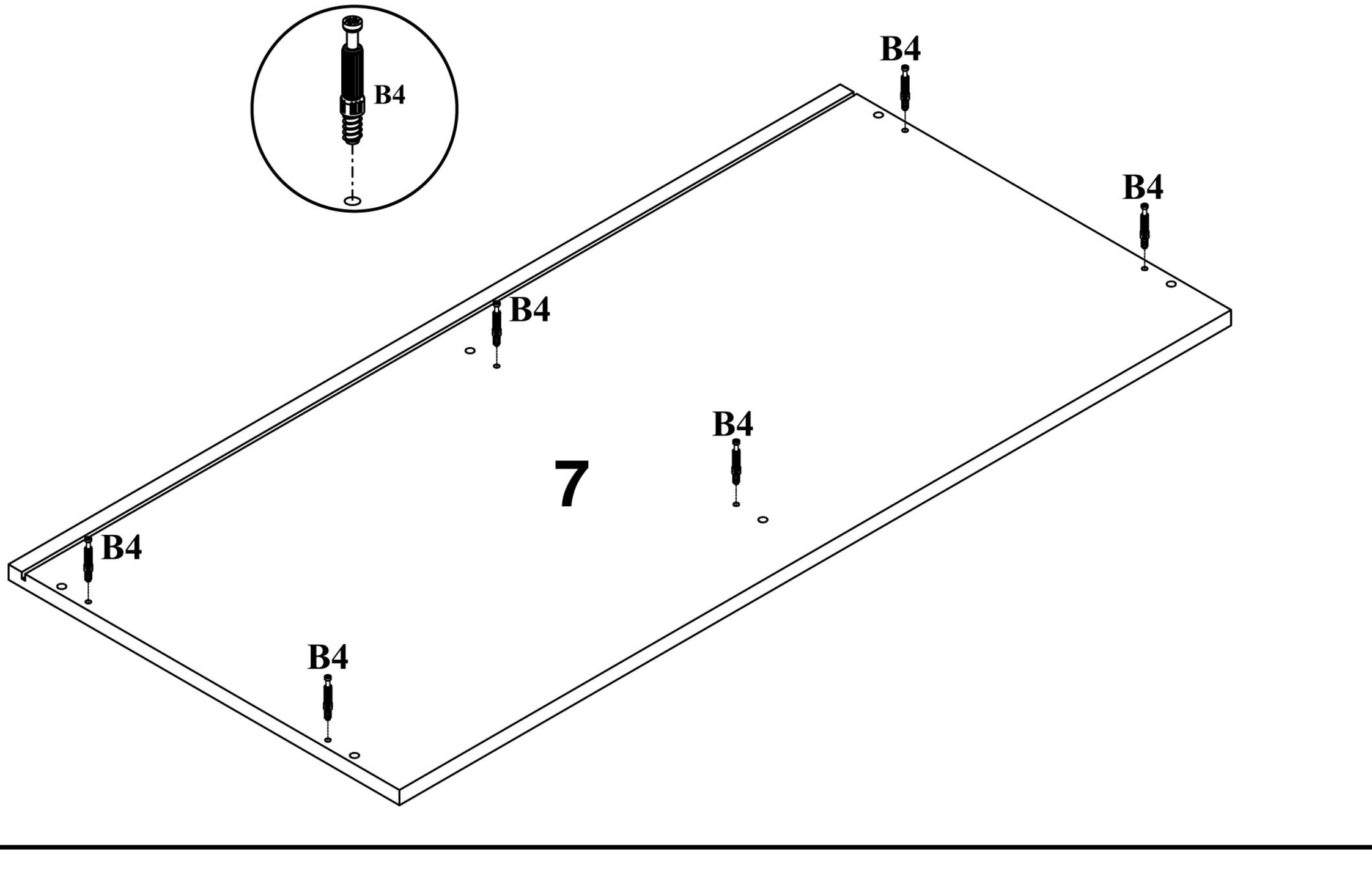

TYP 30 LOGO 3

3

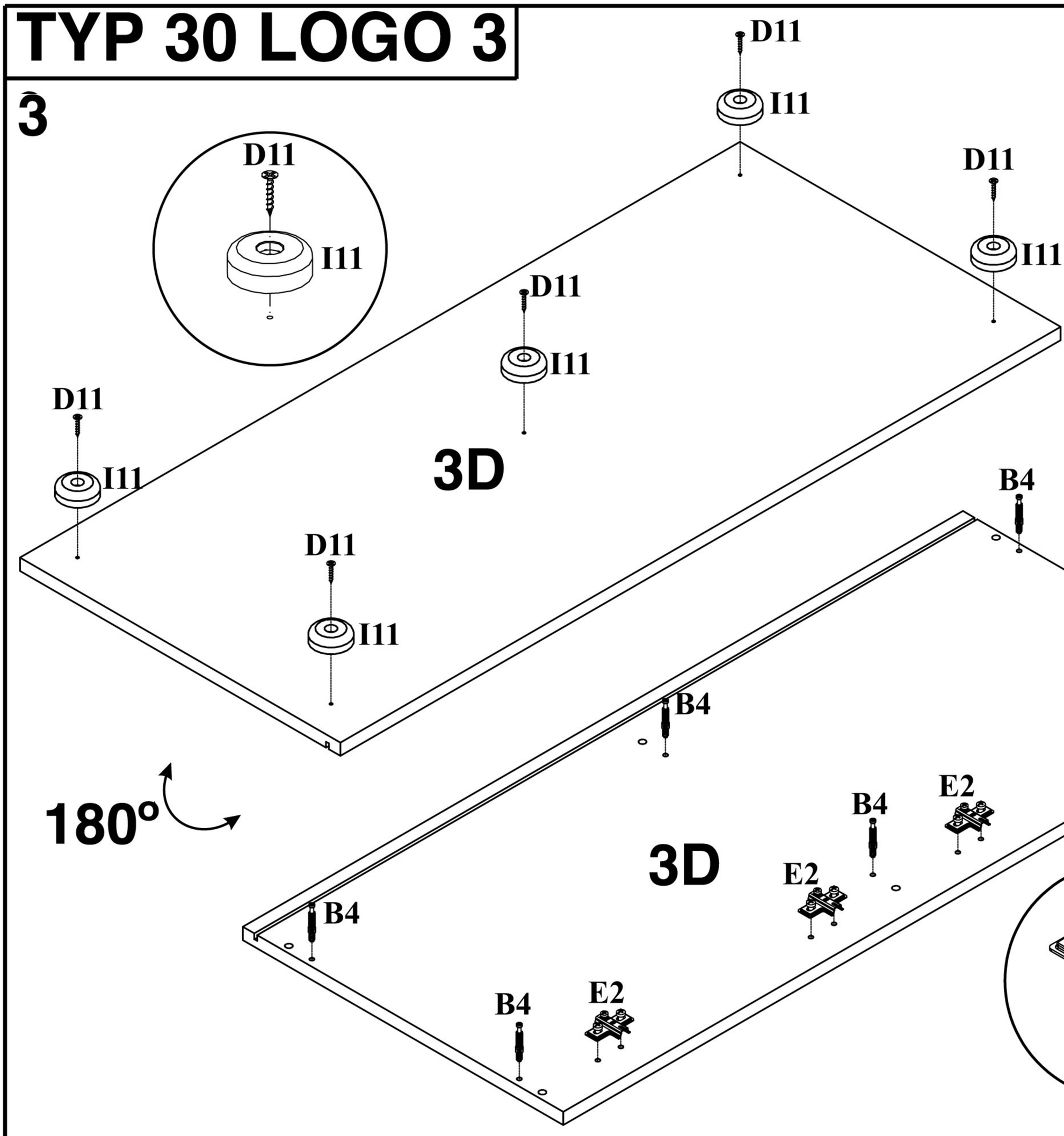

4

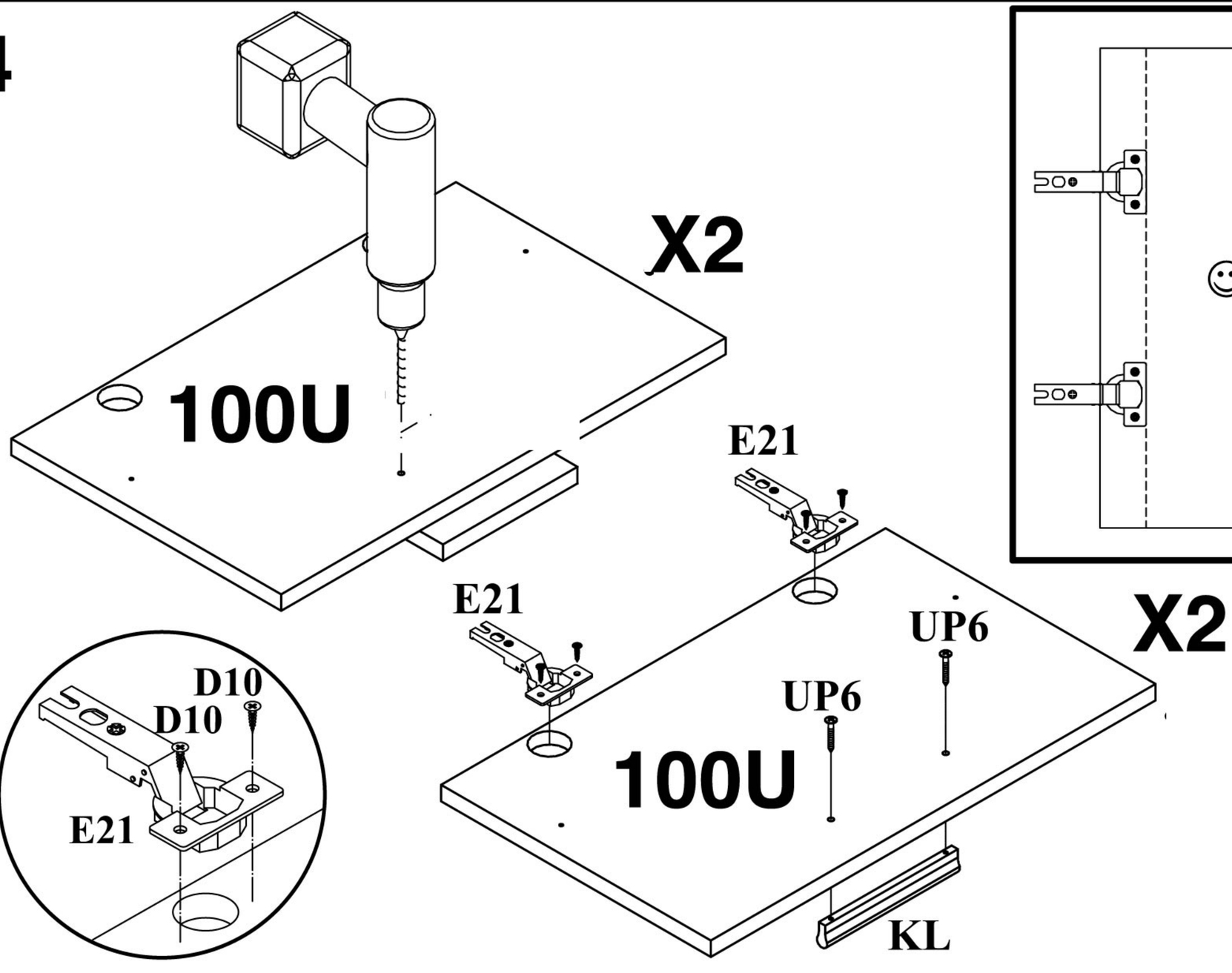

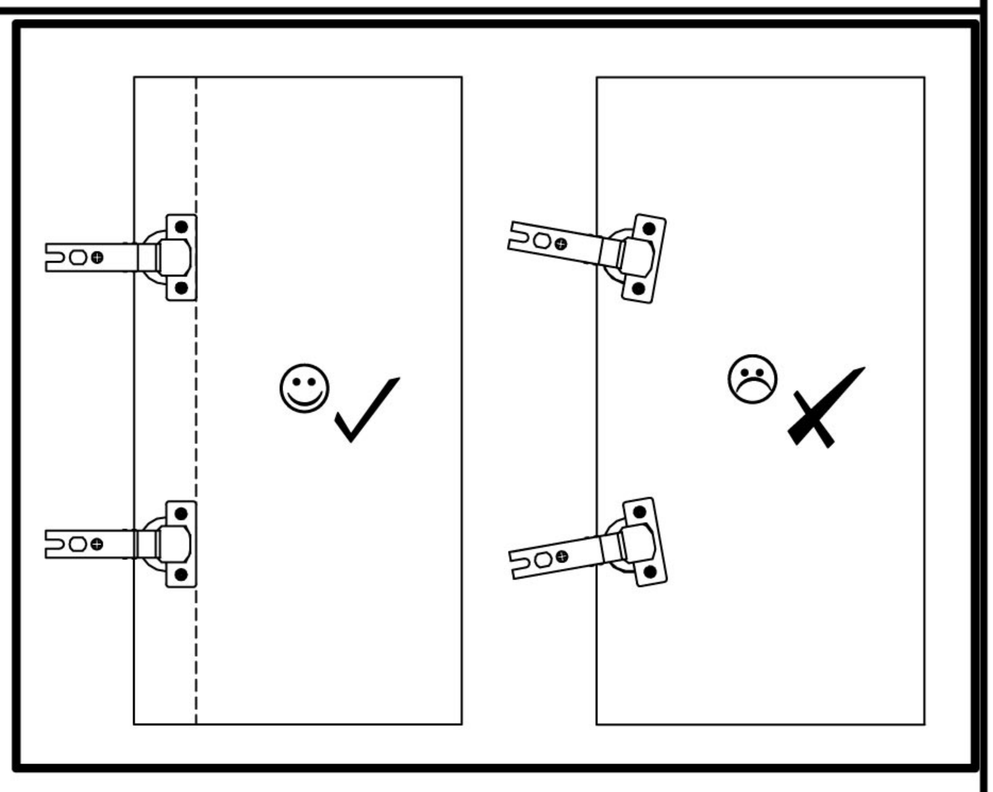

TYP 30 LOGO 3

5

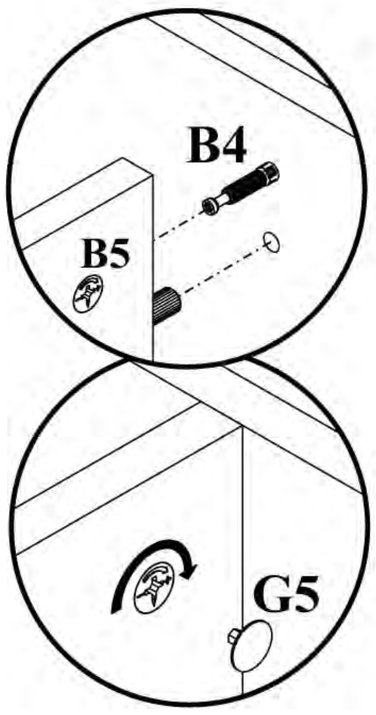

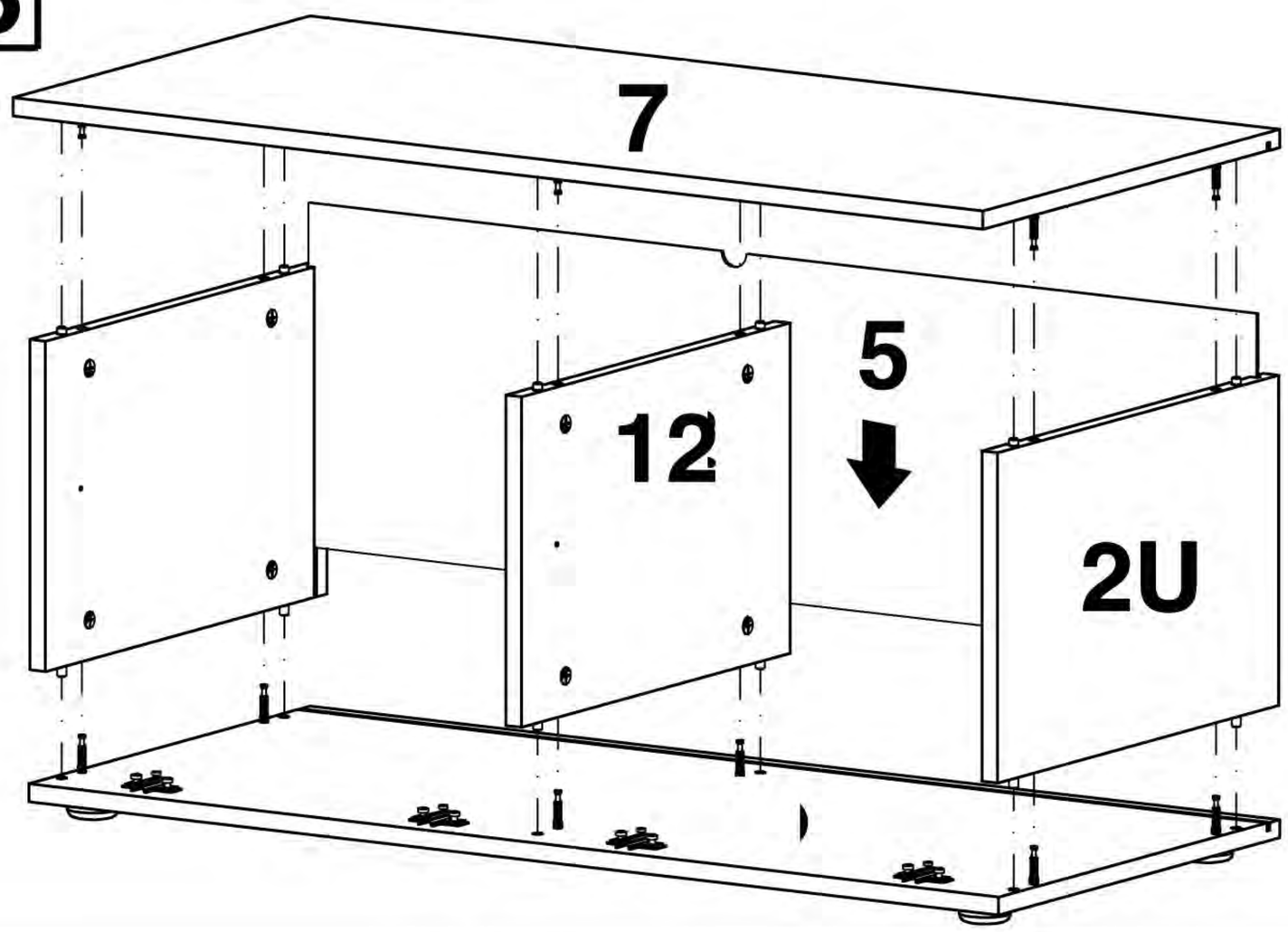

6

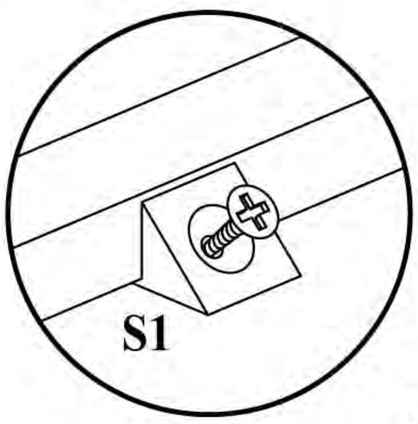

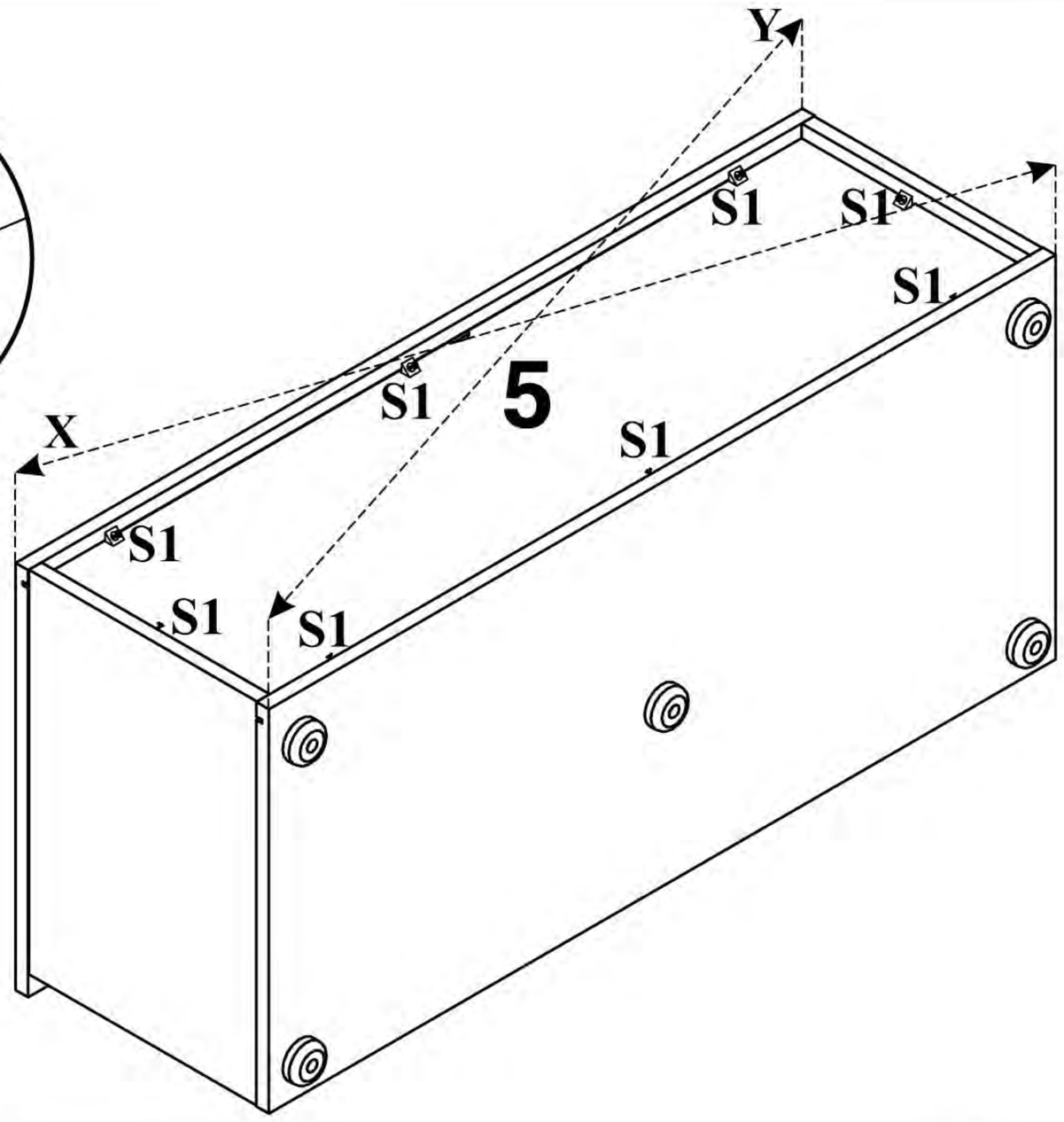

X=Y 90°

7

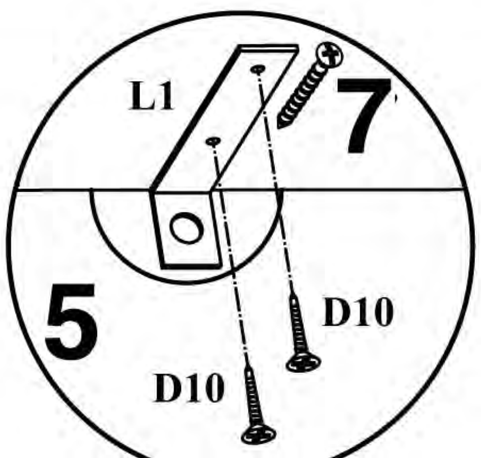

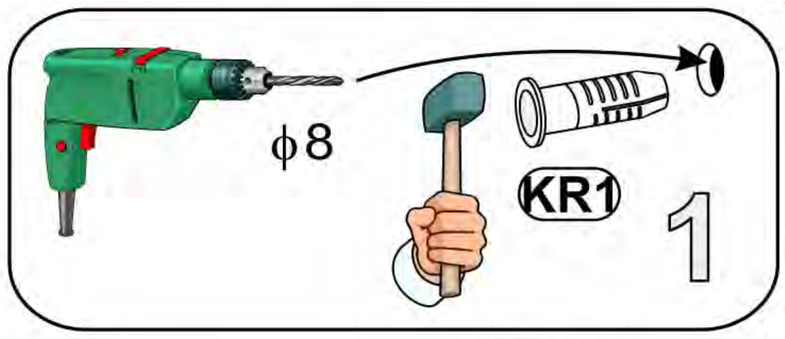

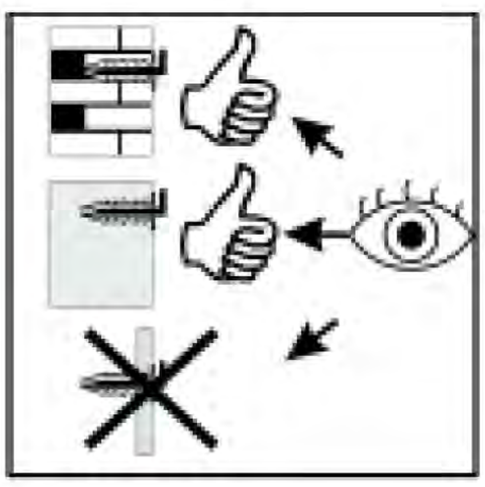

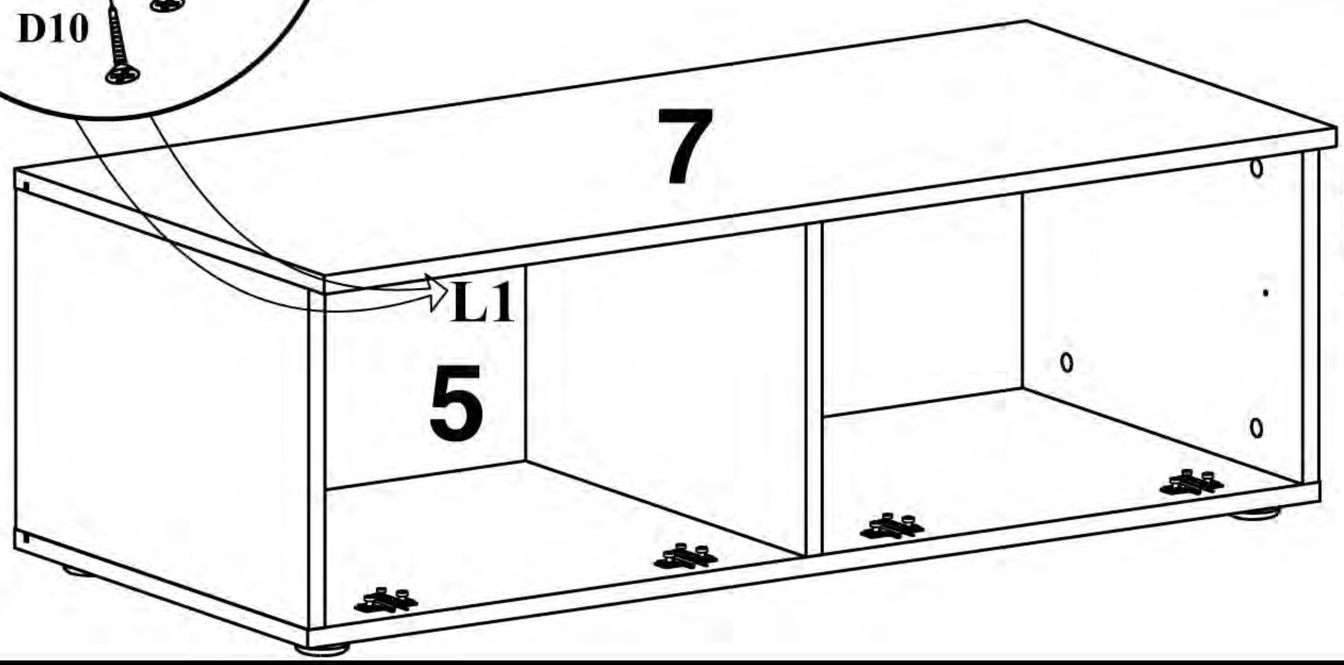

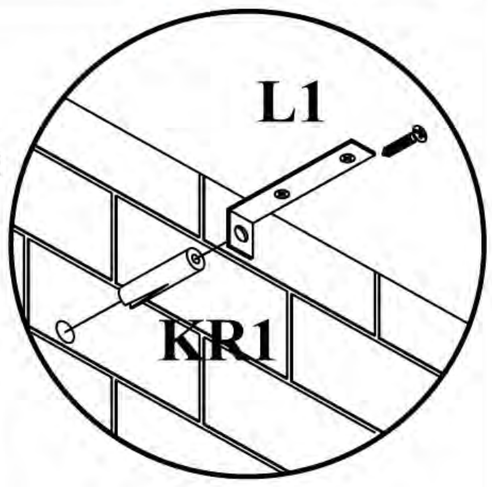

TYP 30 LOGO 3

8

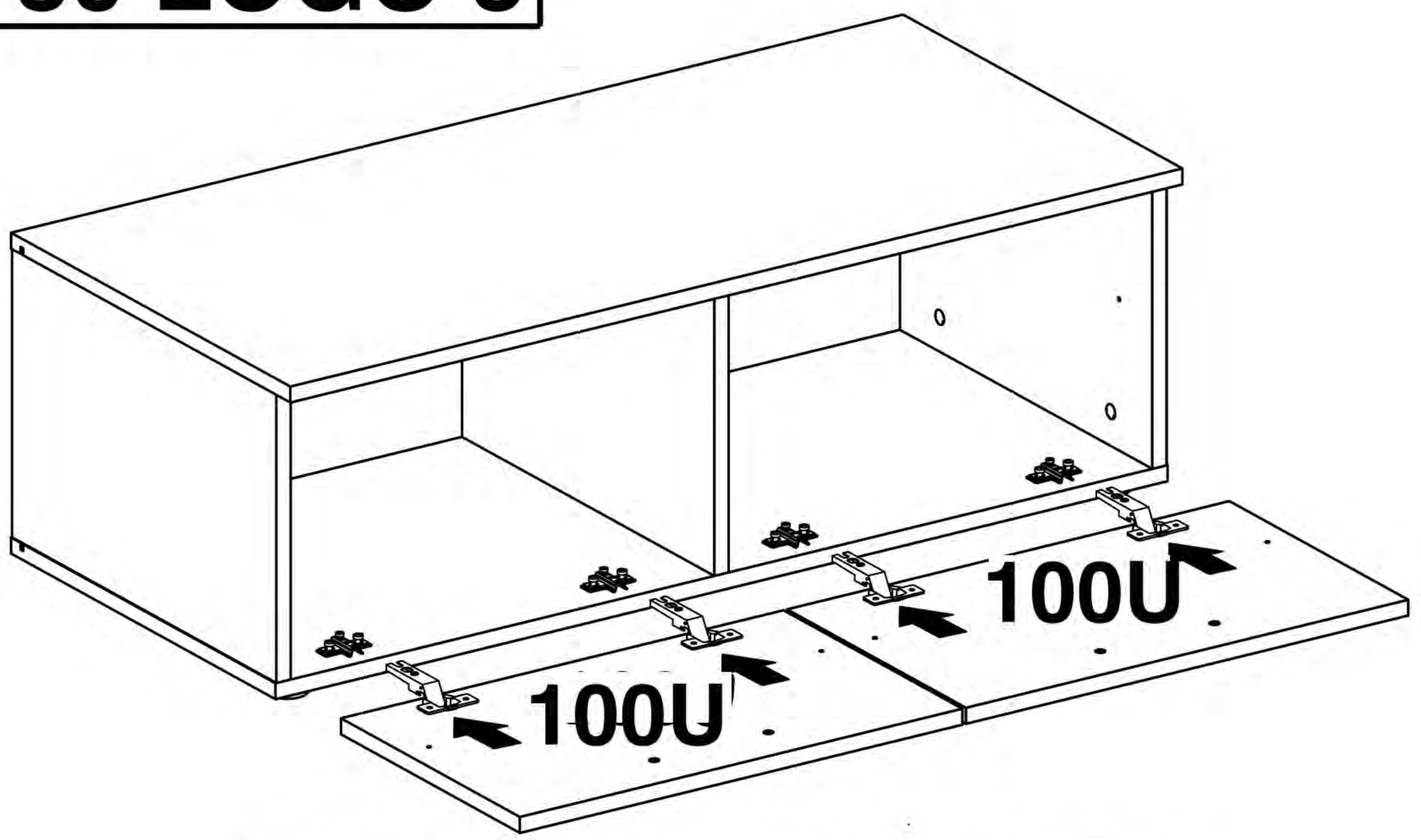

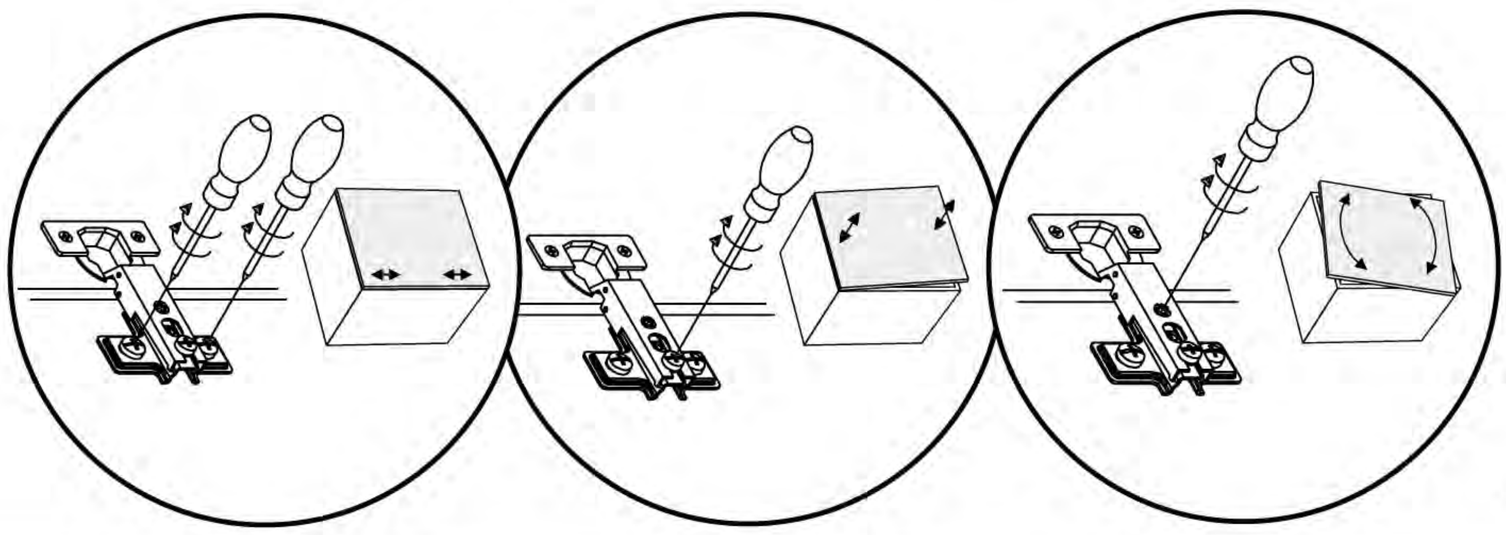

9

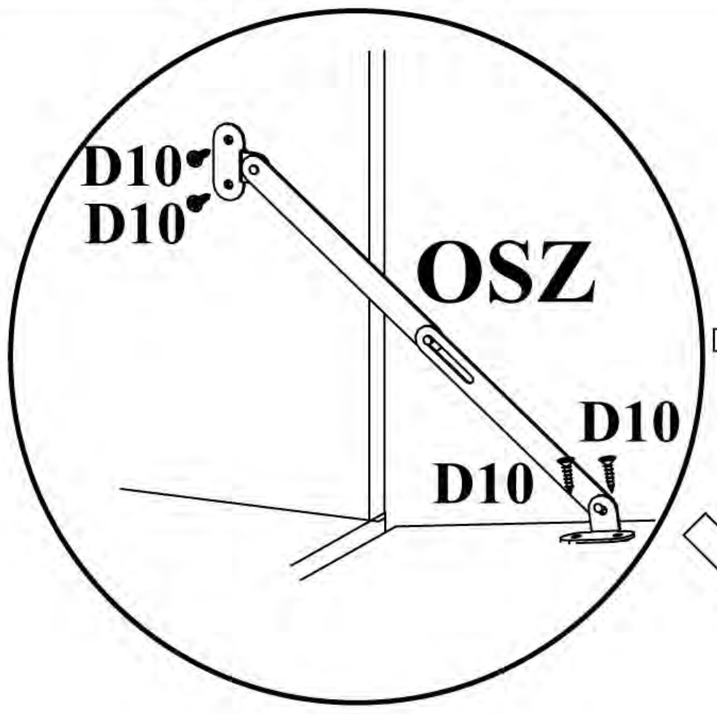

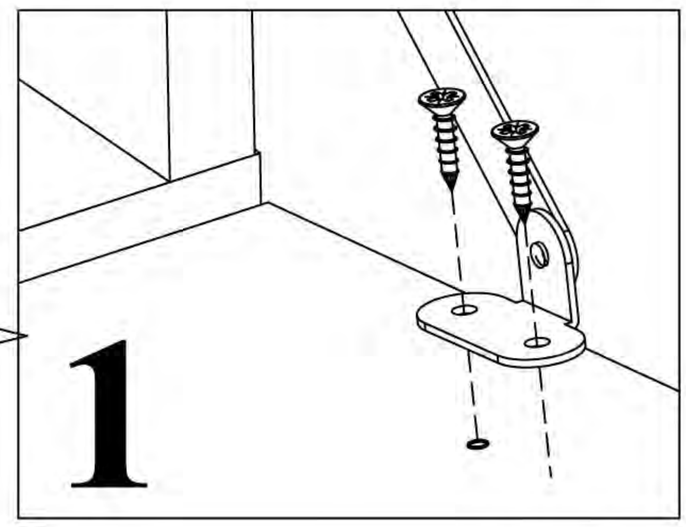

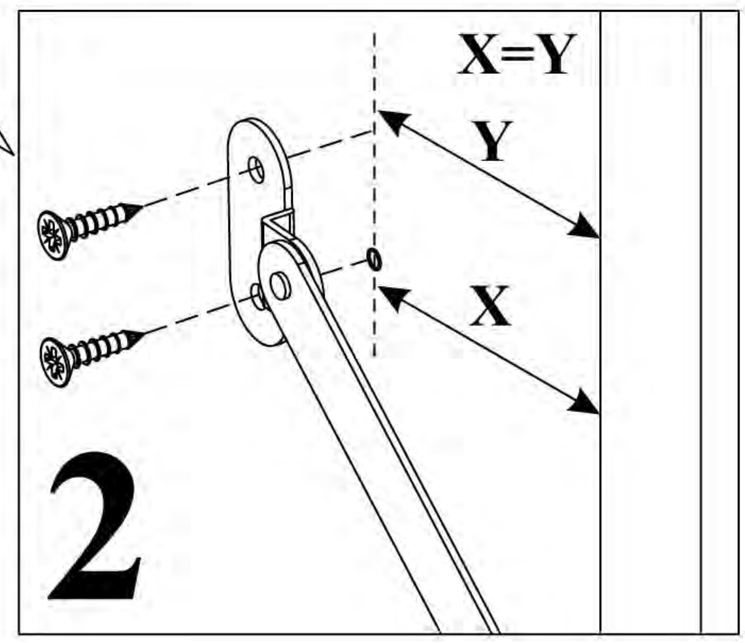

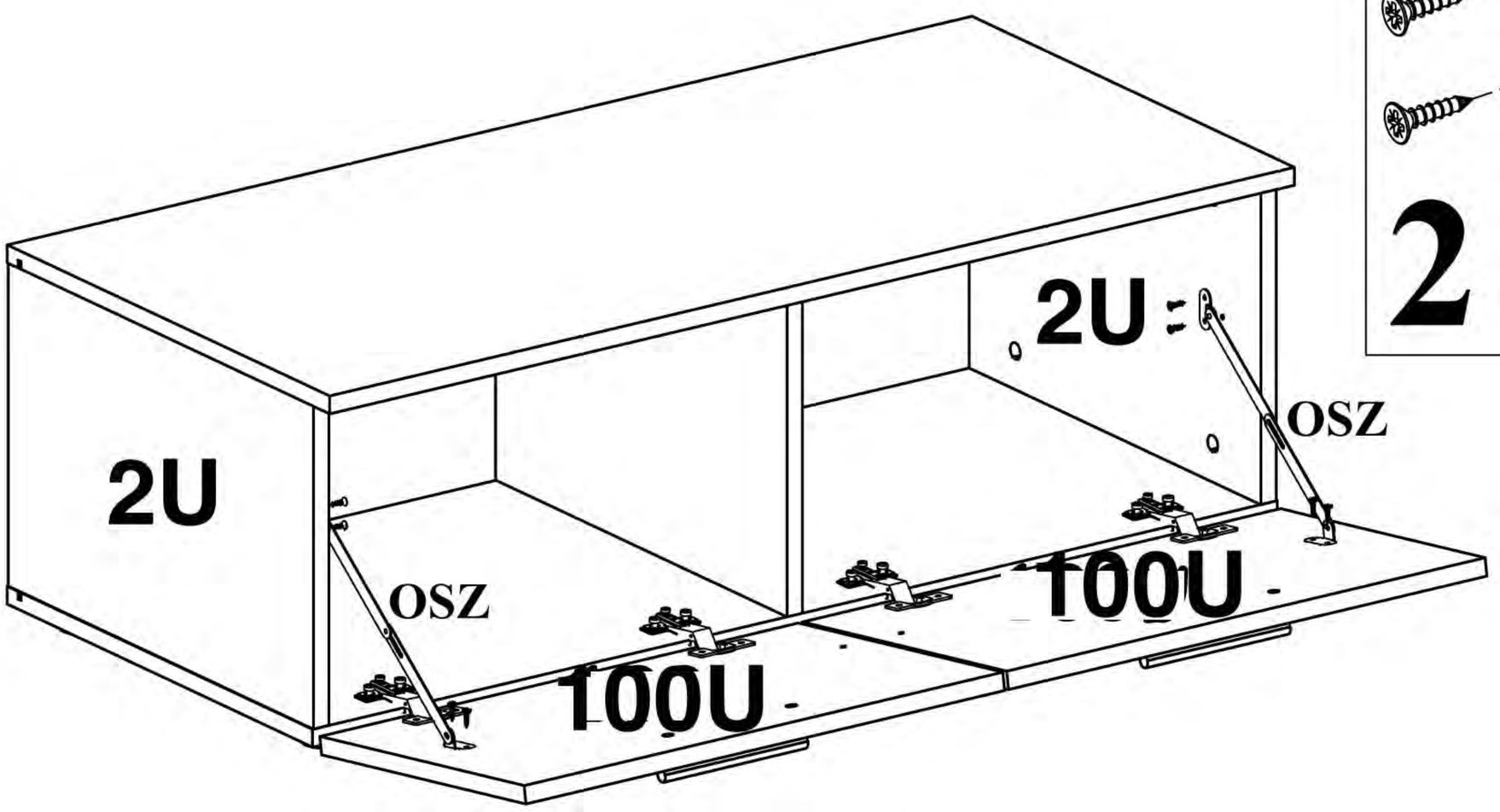

TYP31

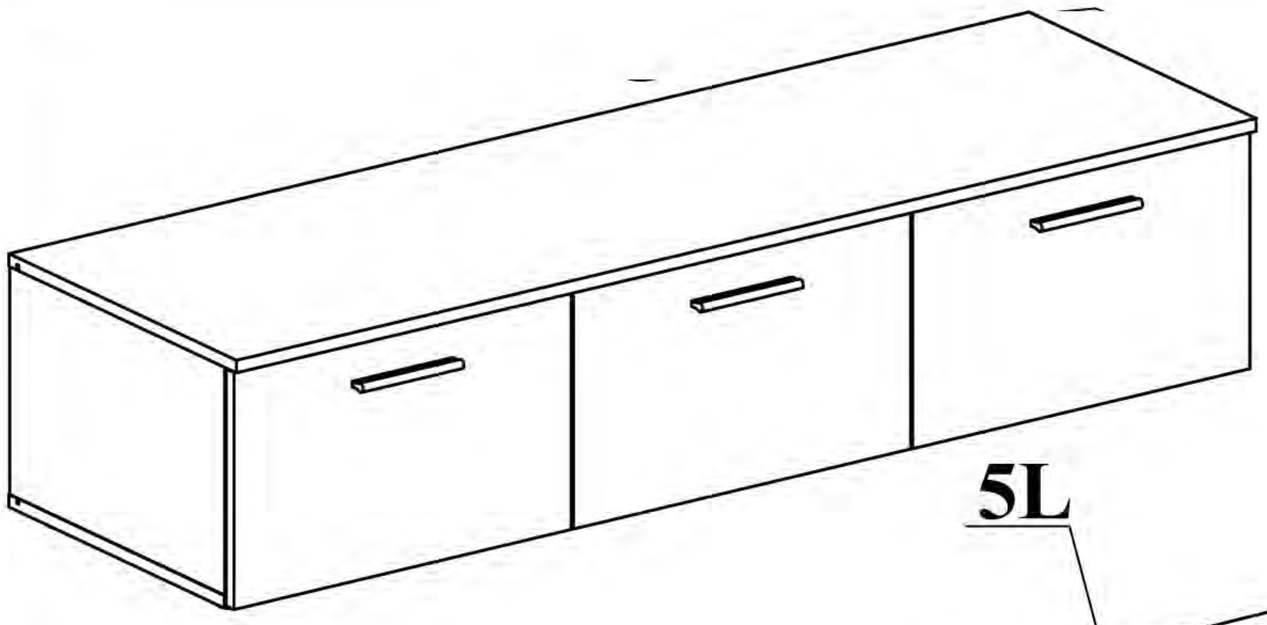

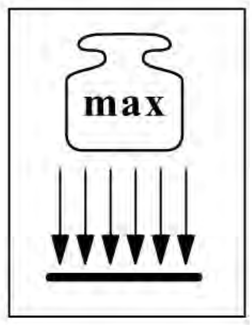

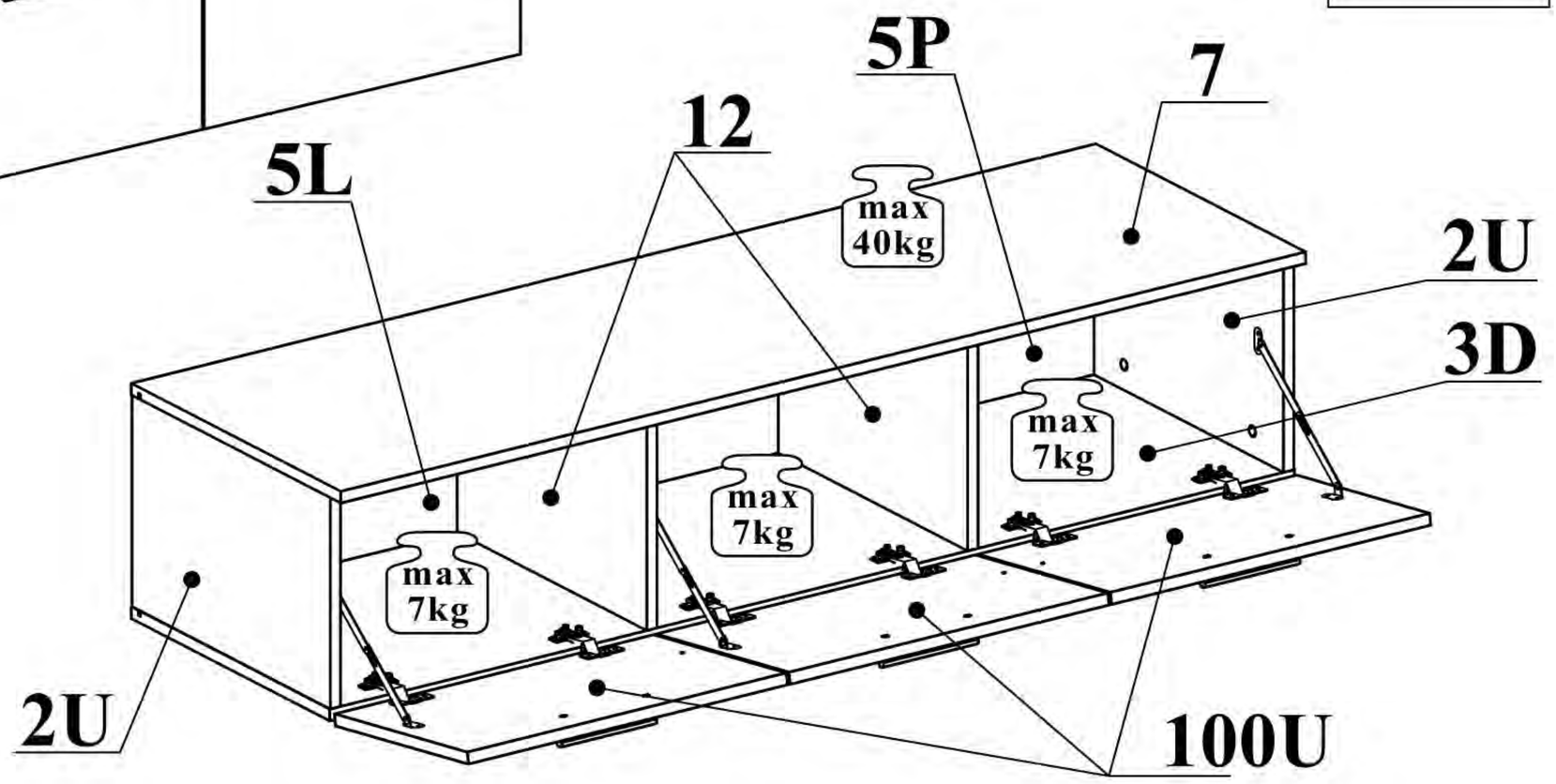

A1 X16 ø8x36	B4 X16	B5 X16 ø15x12	G5 X16	I11 X6	D11 X6 USØ3,5x25
E21 X6 Ø35 H=0	E2 X6 H=0	D10 X26 USØ3,5x13	OSZ X3	KL X3 L-128mm	UP6 X6 UPØ4x30
G16 X2	UP13 X2 UPØ3x16	S1 X12	L1 X1	KR1 X1	G2 X1

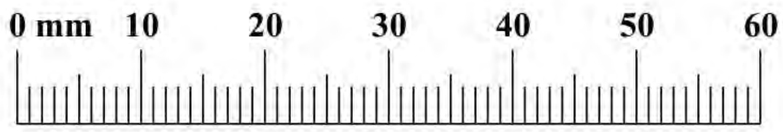

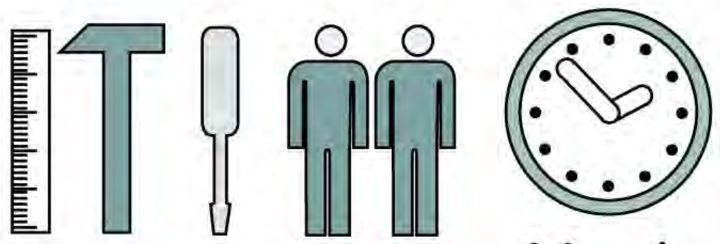

NO	Dim.		Col.-No	Qty
100U	496	299	1	3
2U	290	445	1	2
12	290	425	1	2
3D	1500	445	1	1
5L	989	302	1	1
5P	489	302	1	1
7	1500	470	1	1

TYP 31 LOGO 3

1

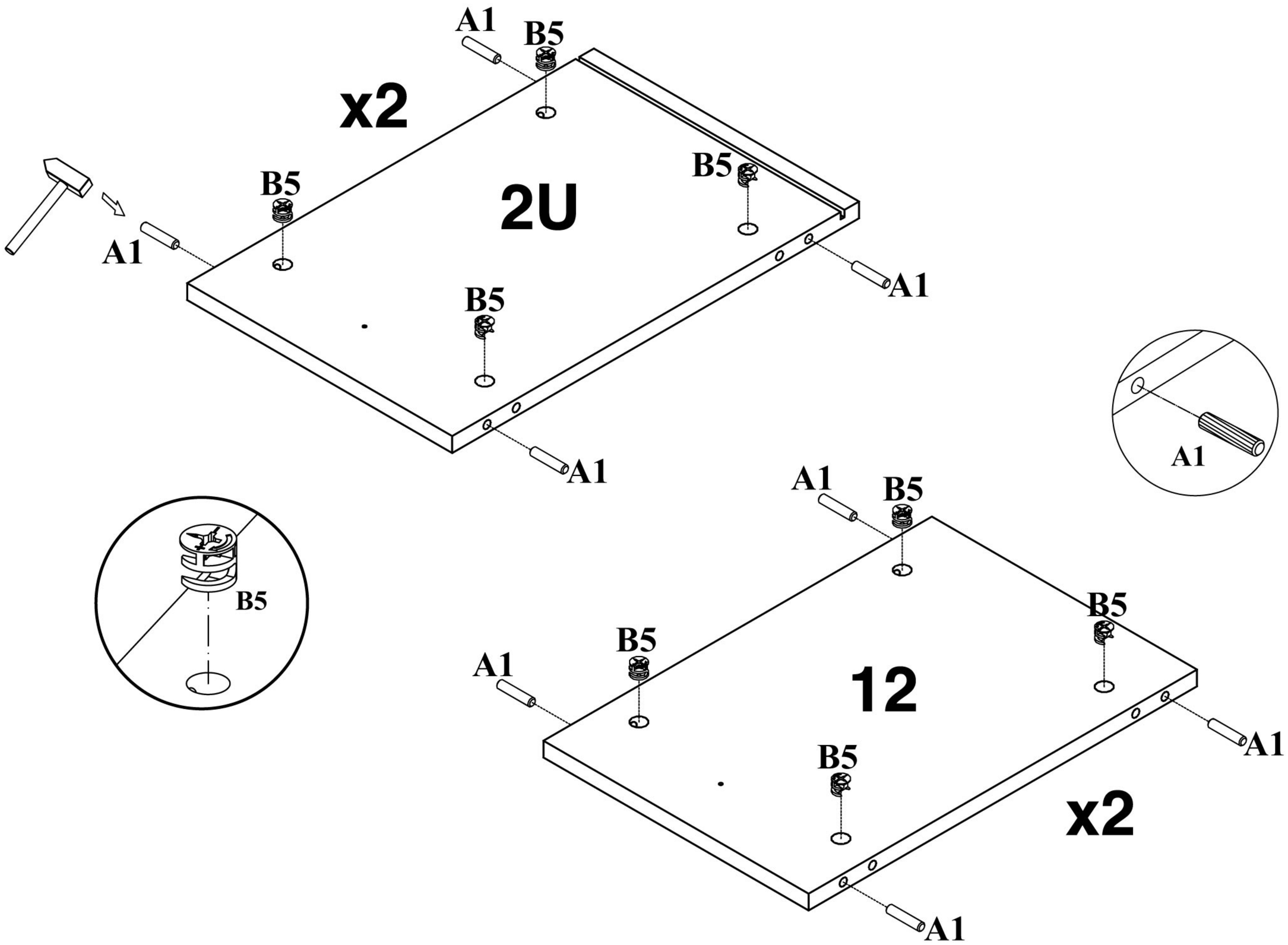

2

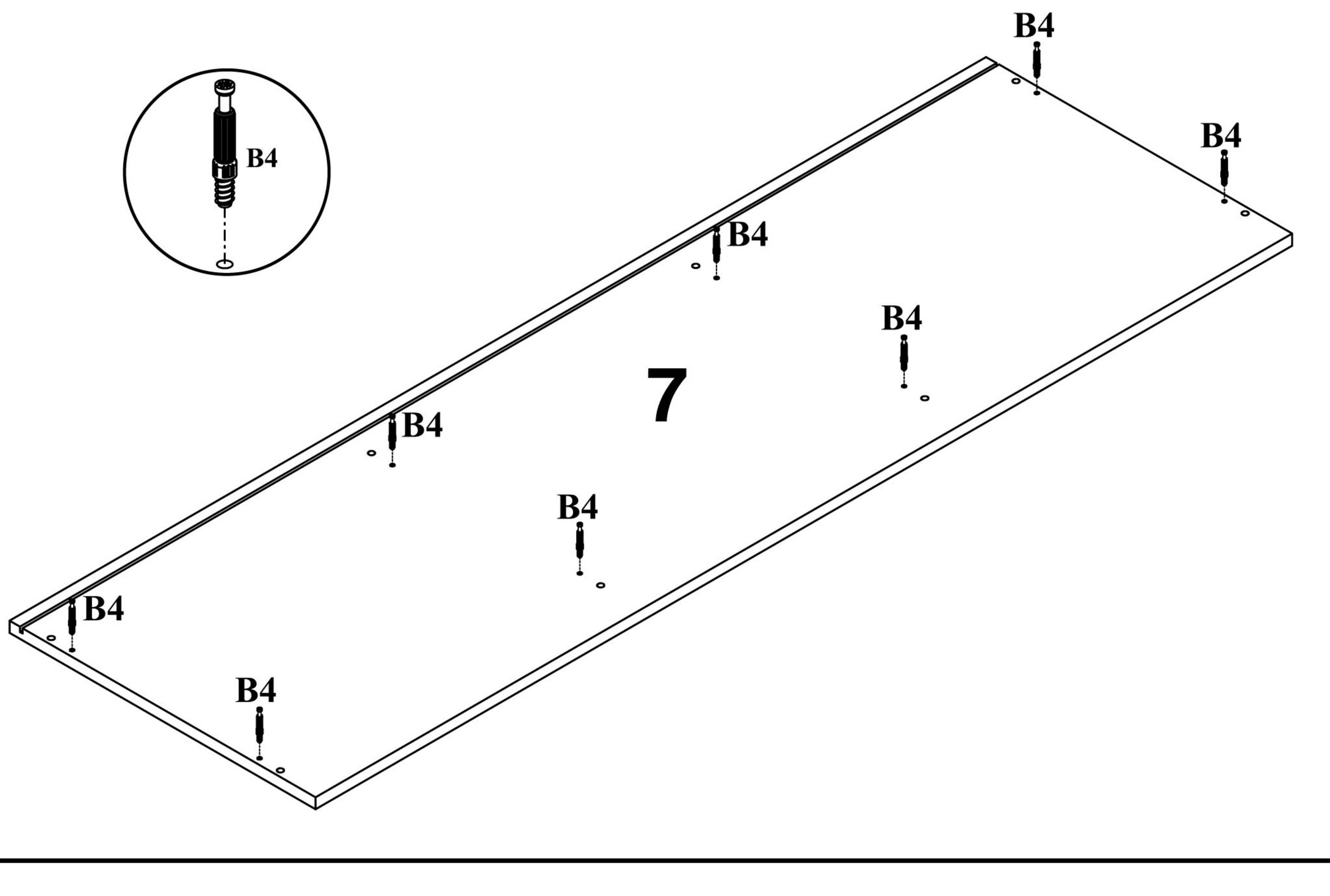

TYP 31 LOGO 3

3

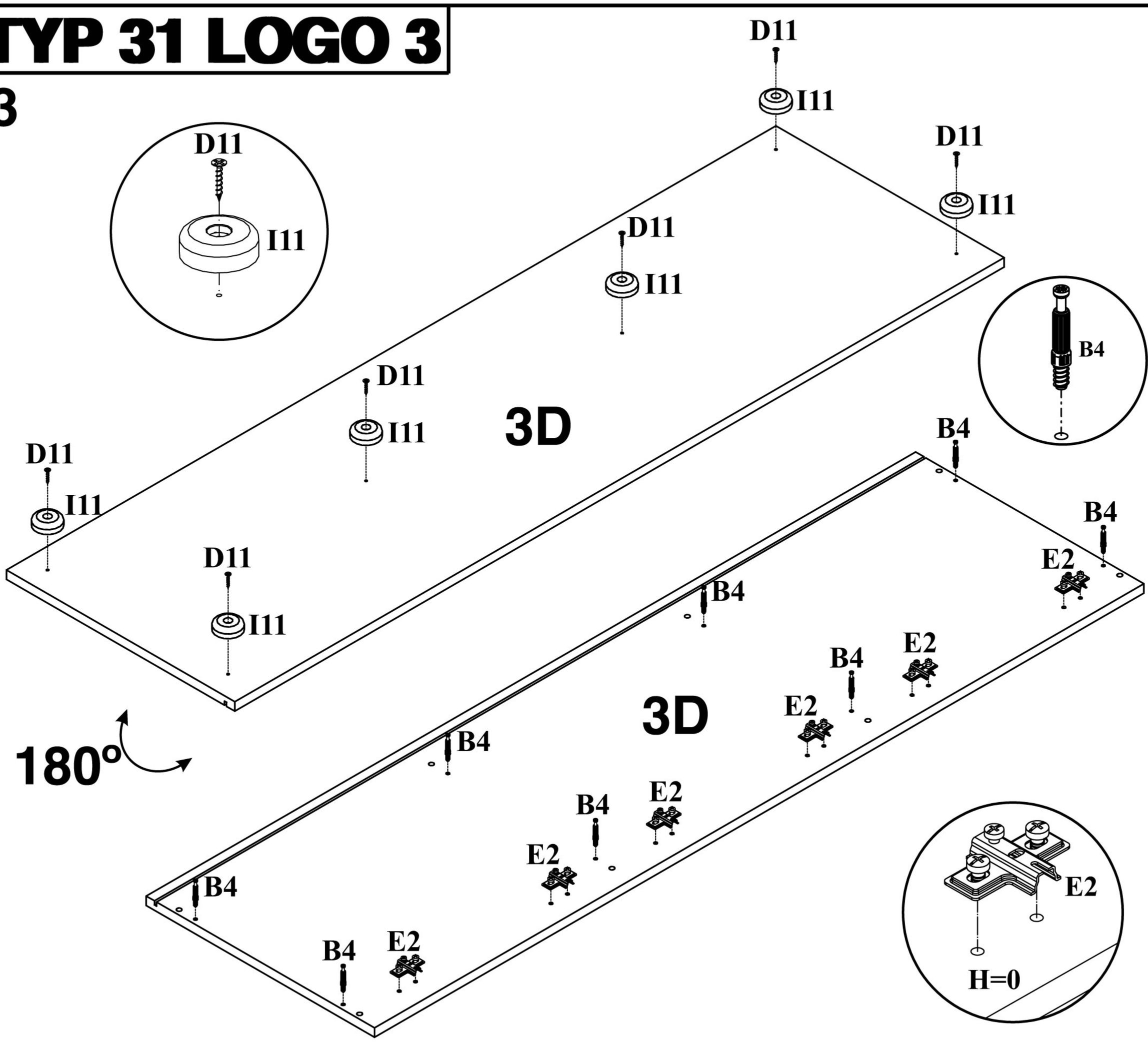

4

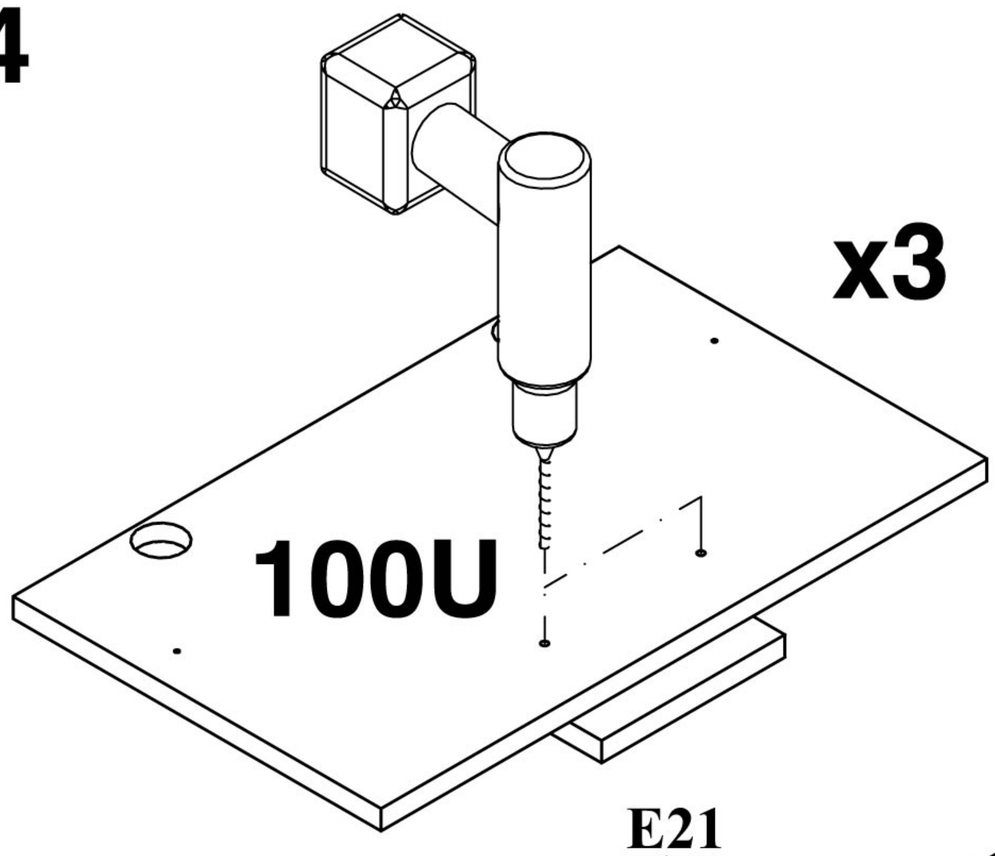

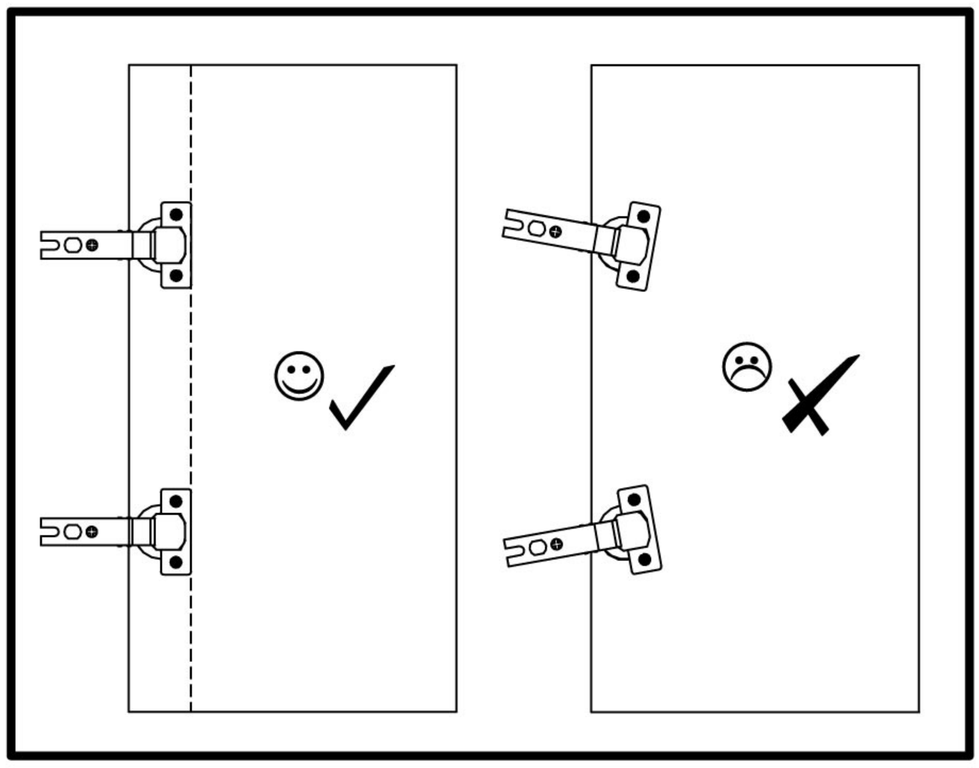

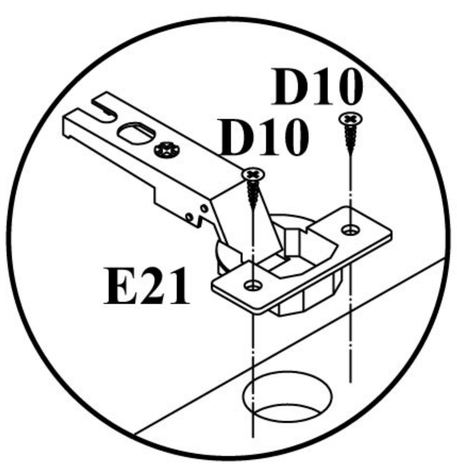

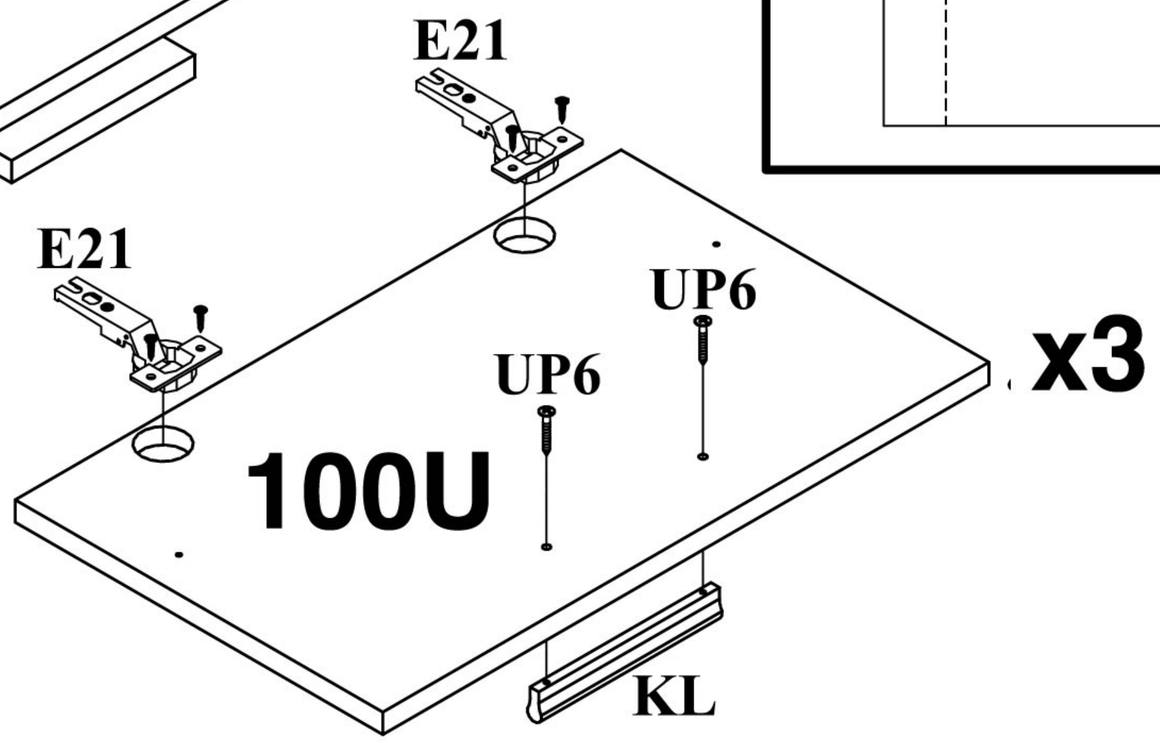

TYP 31 LOGO 3

3

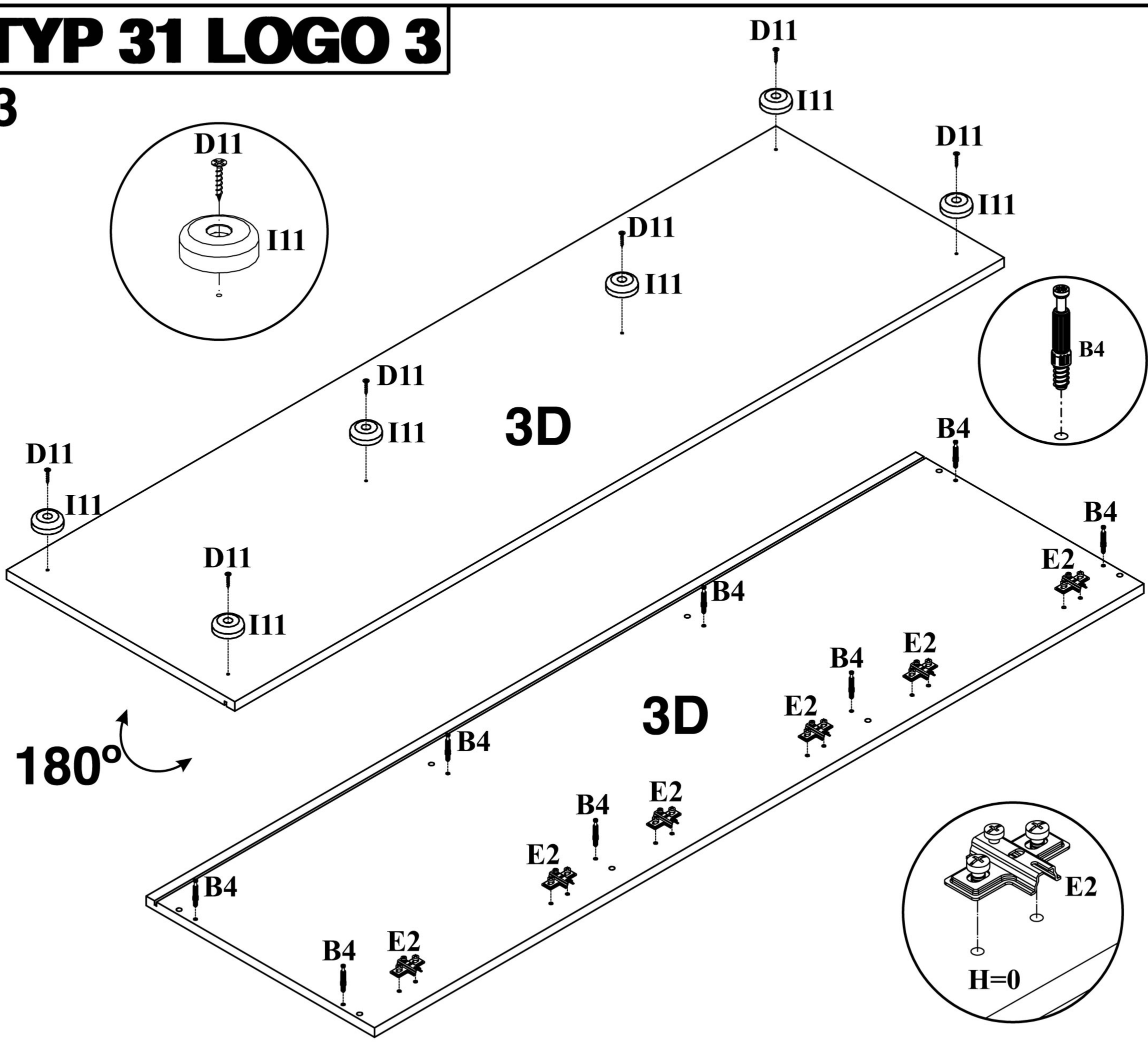

4

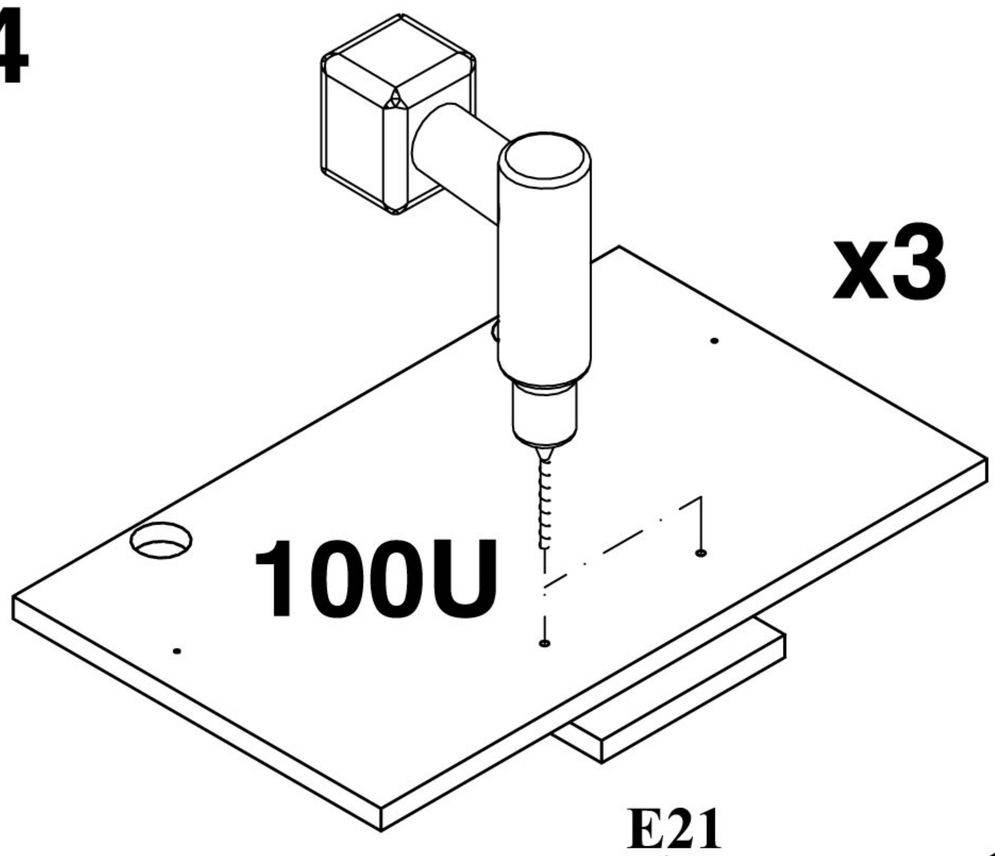

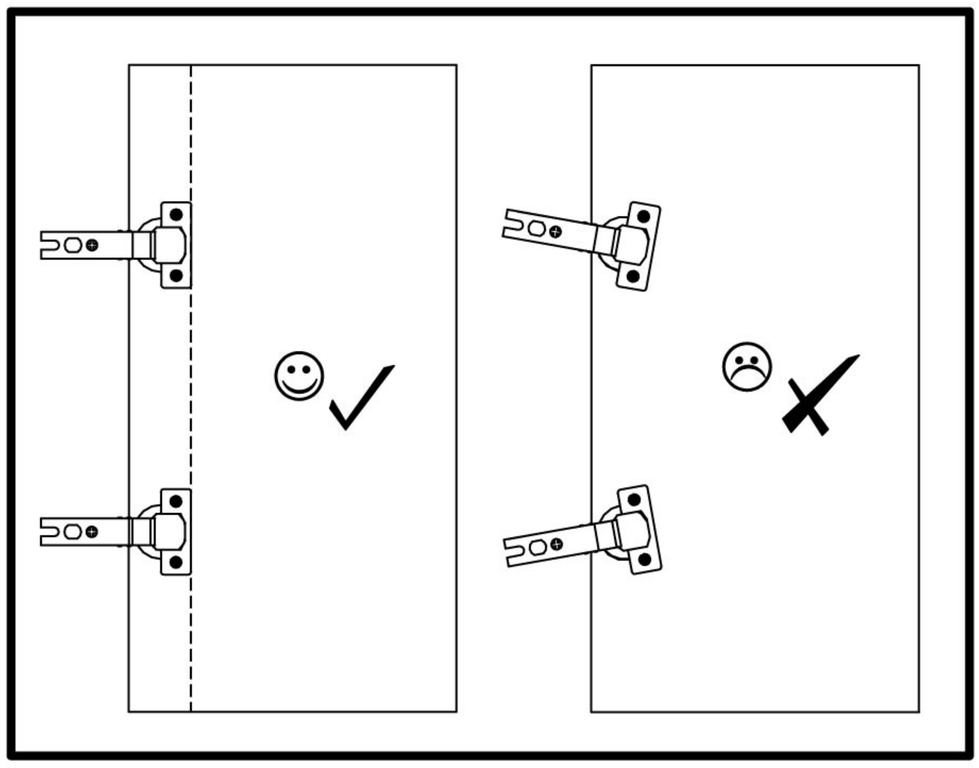

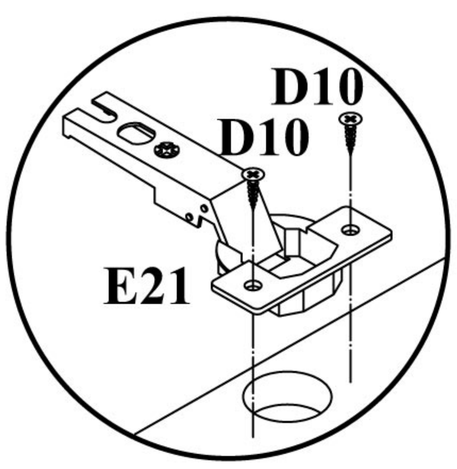

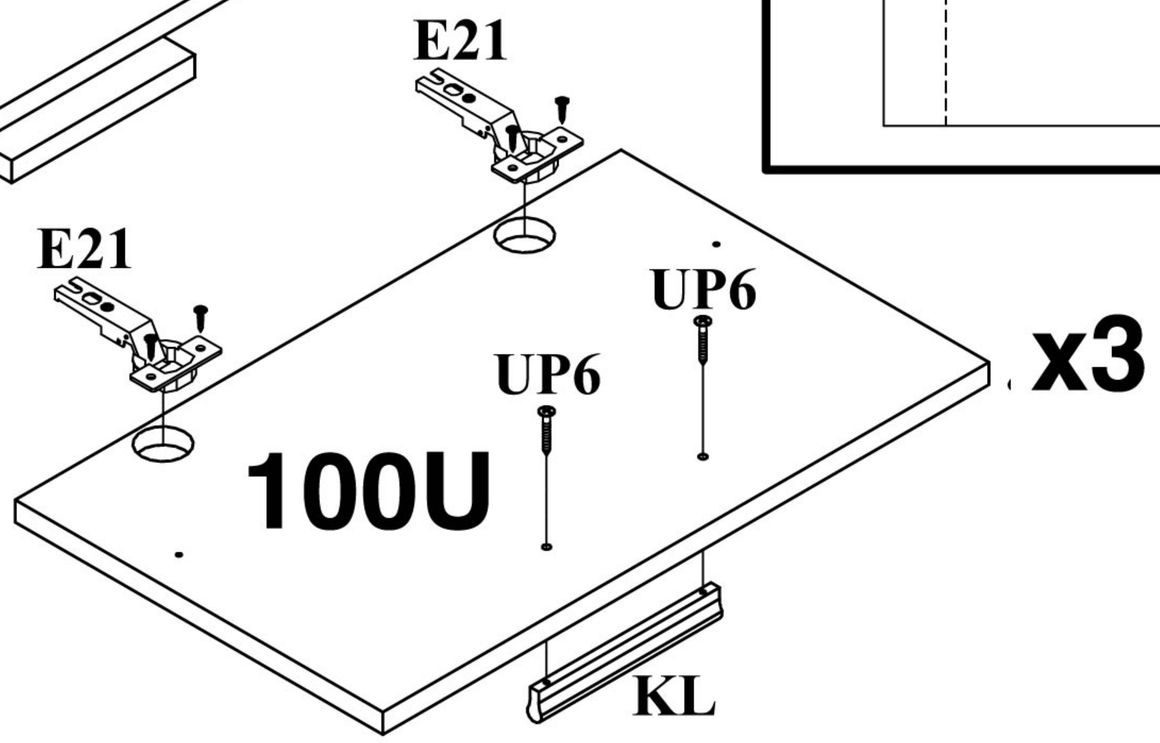

TYP 31 LOGO 3

5

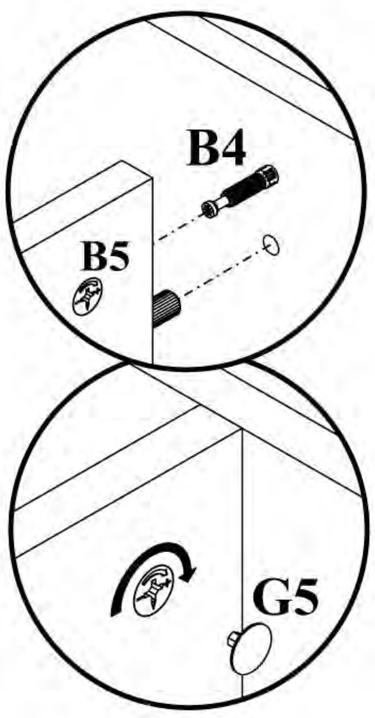

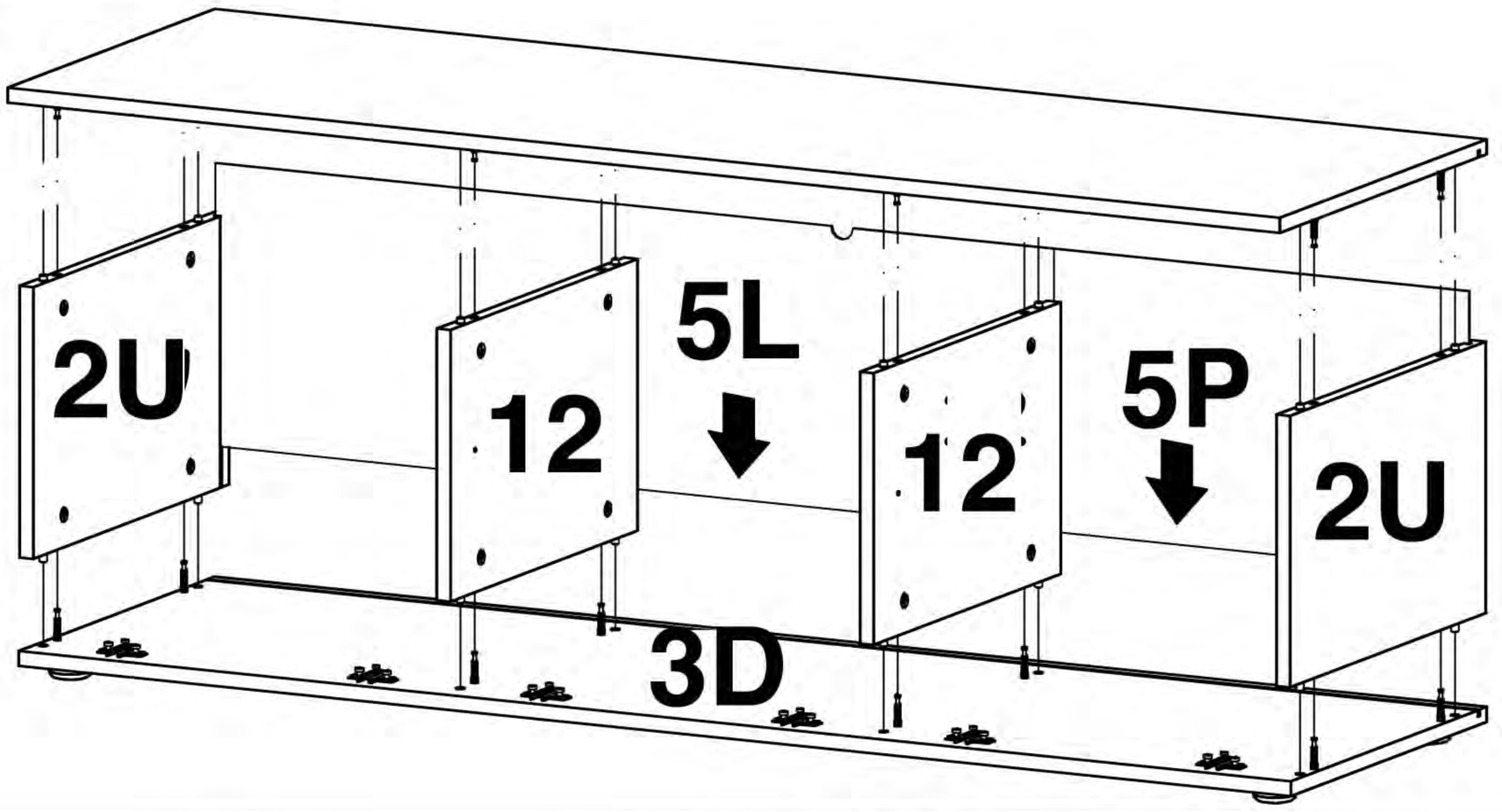

6

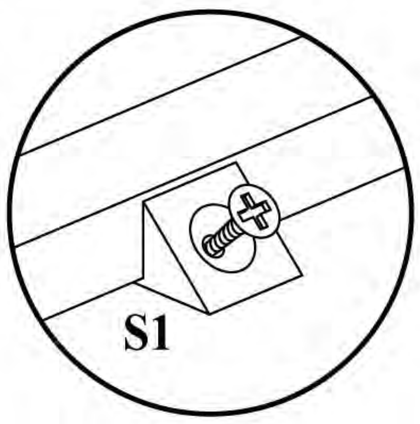

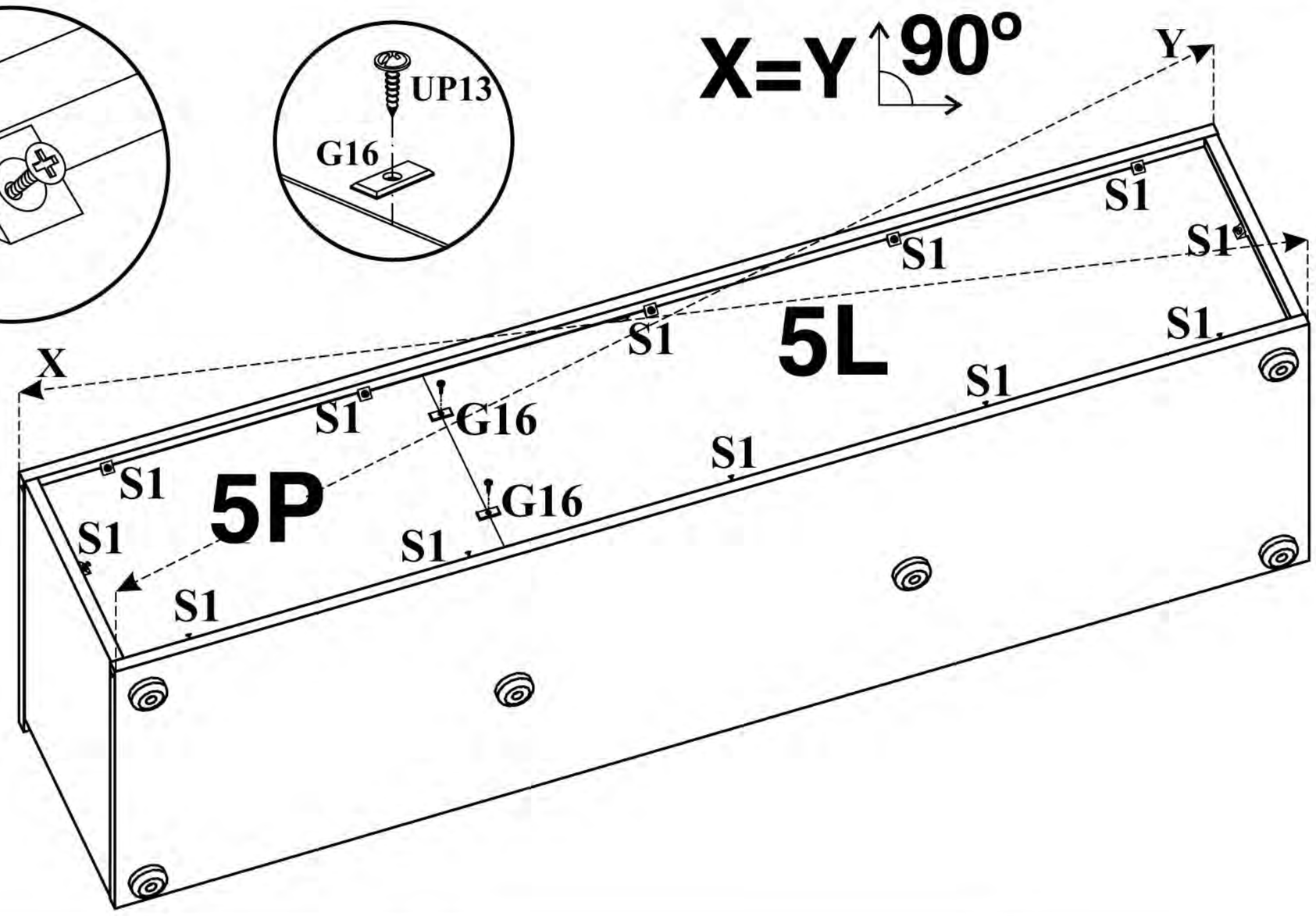

7

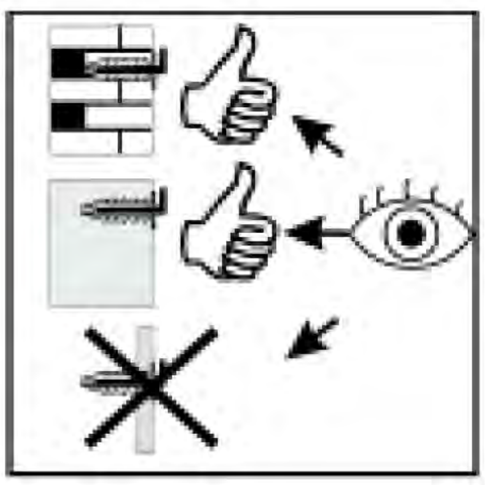

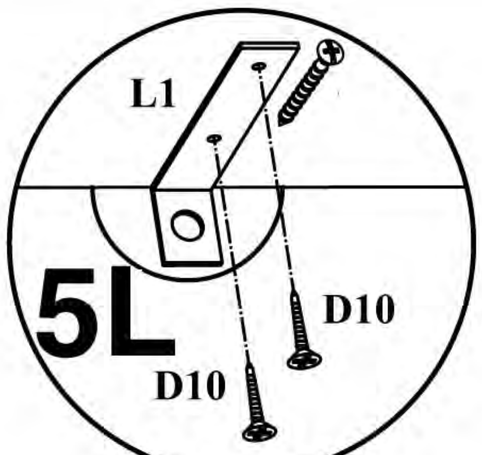

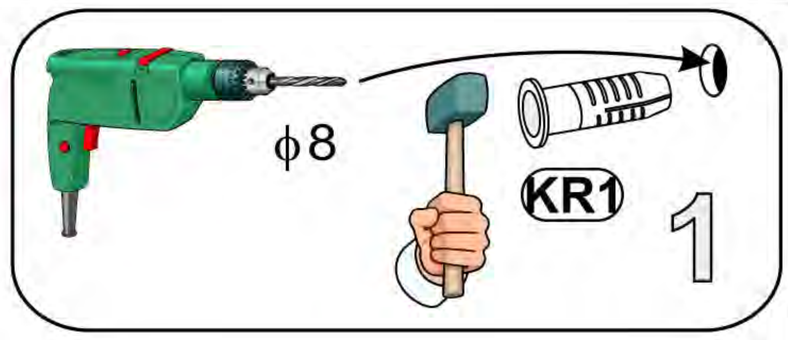

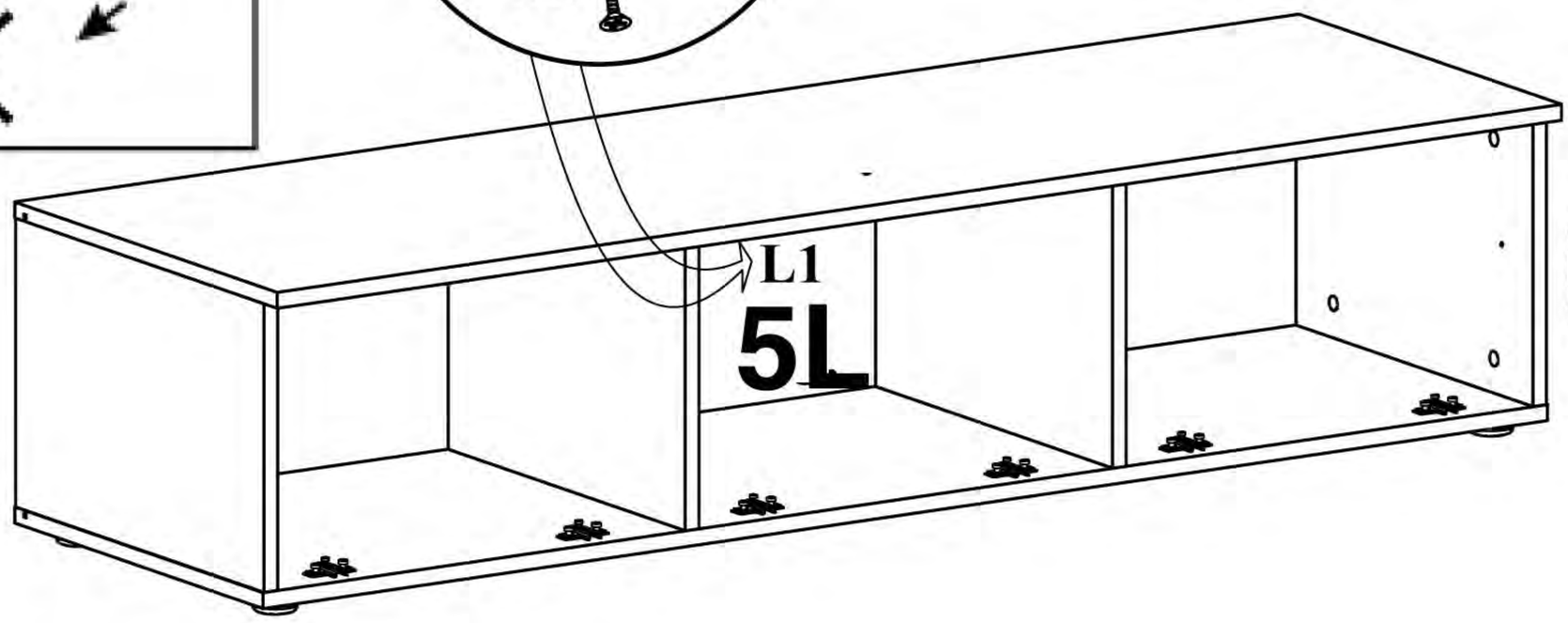

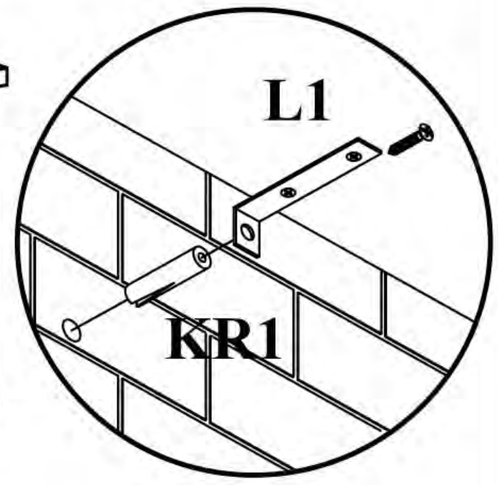

TYP 31 LOGO 3

5

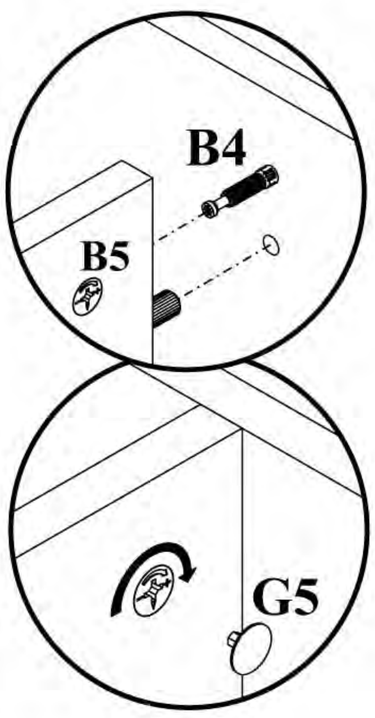

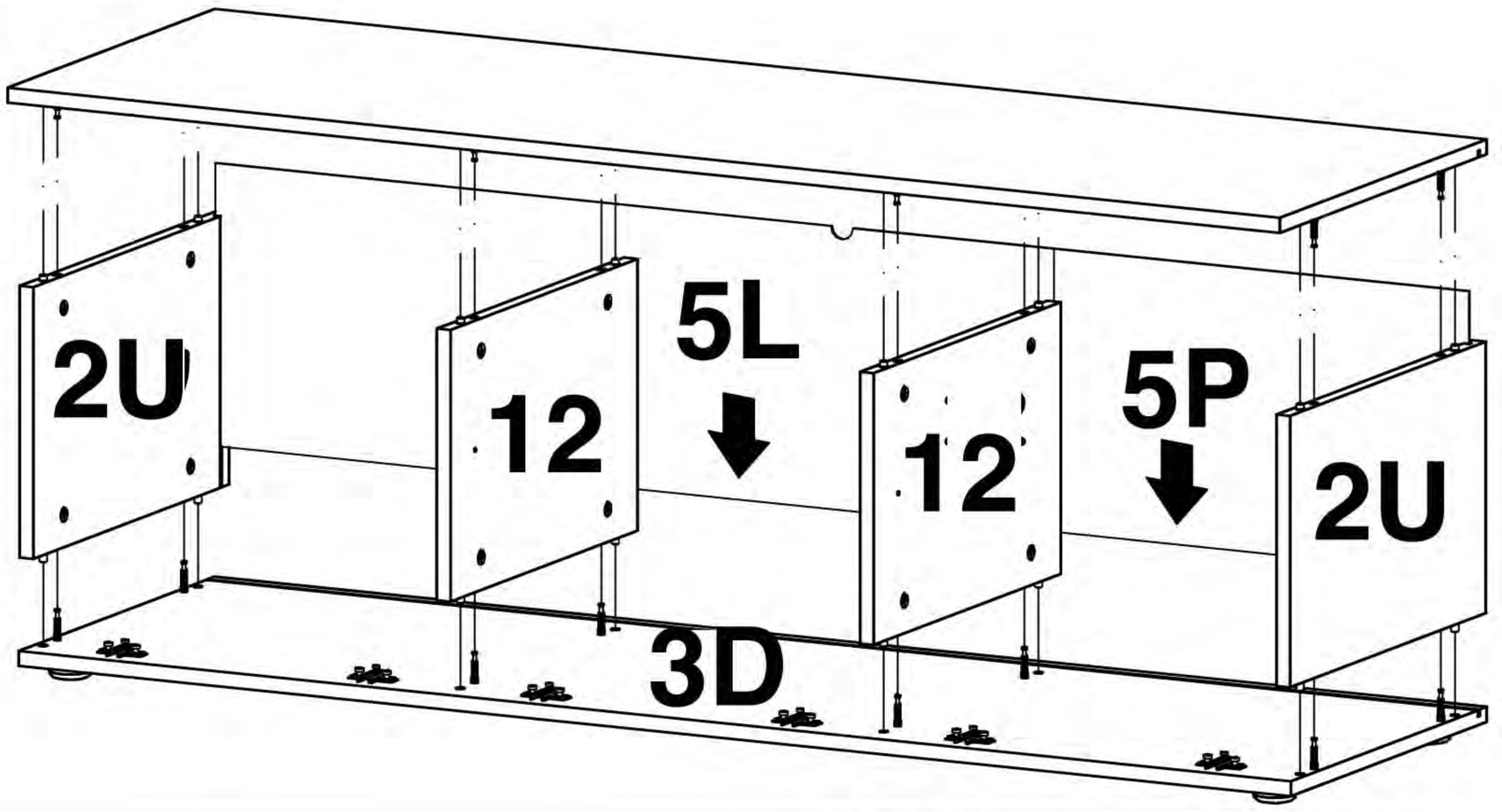

6

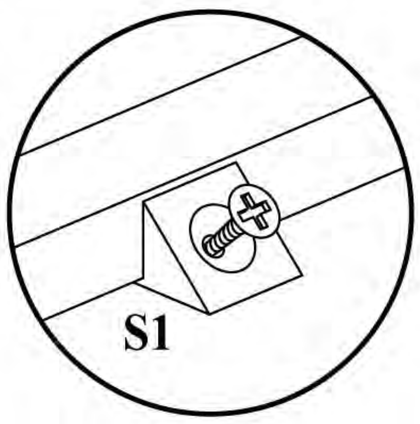

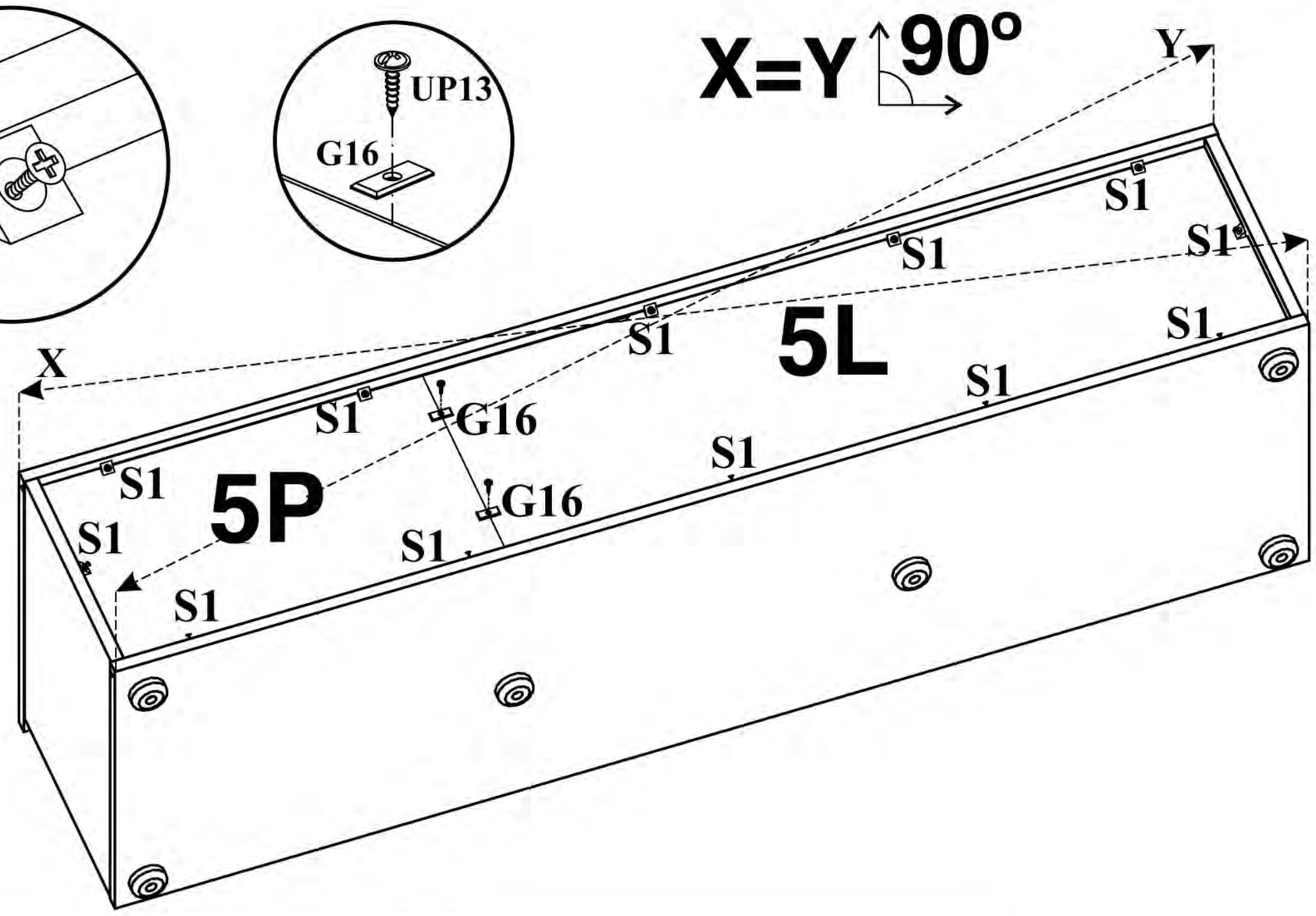

7

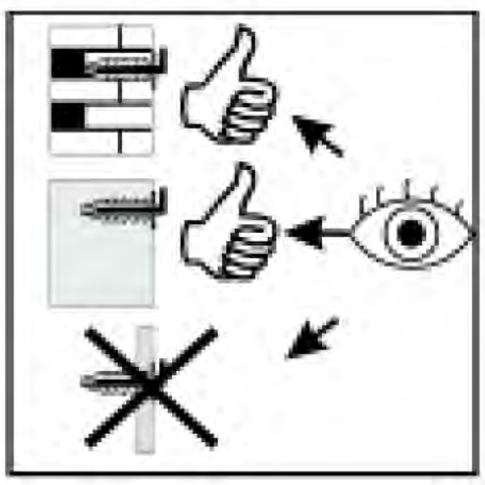

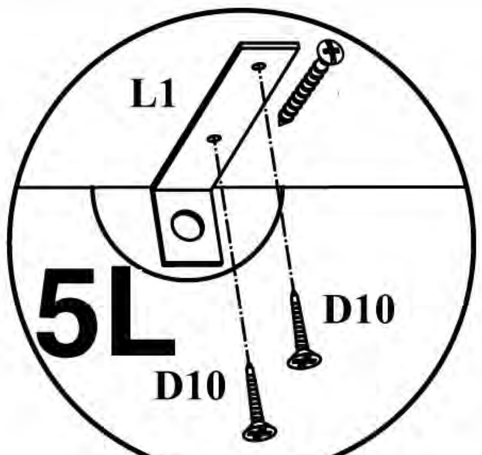

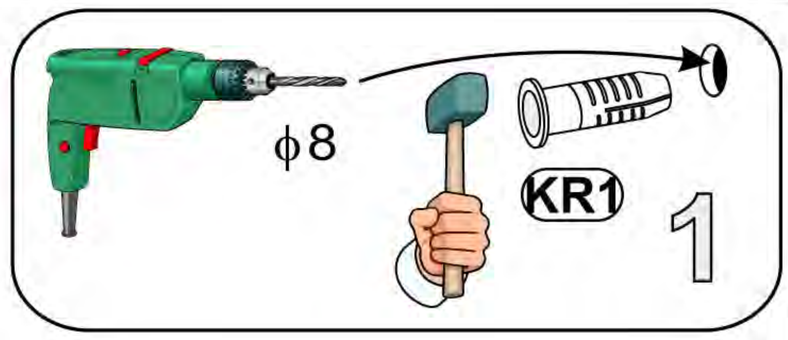

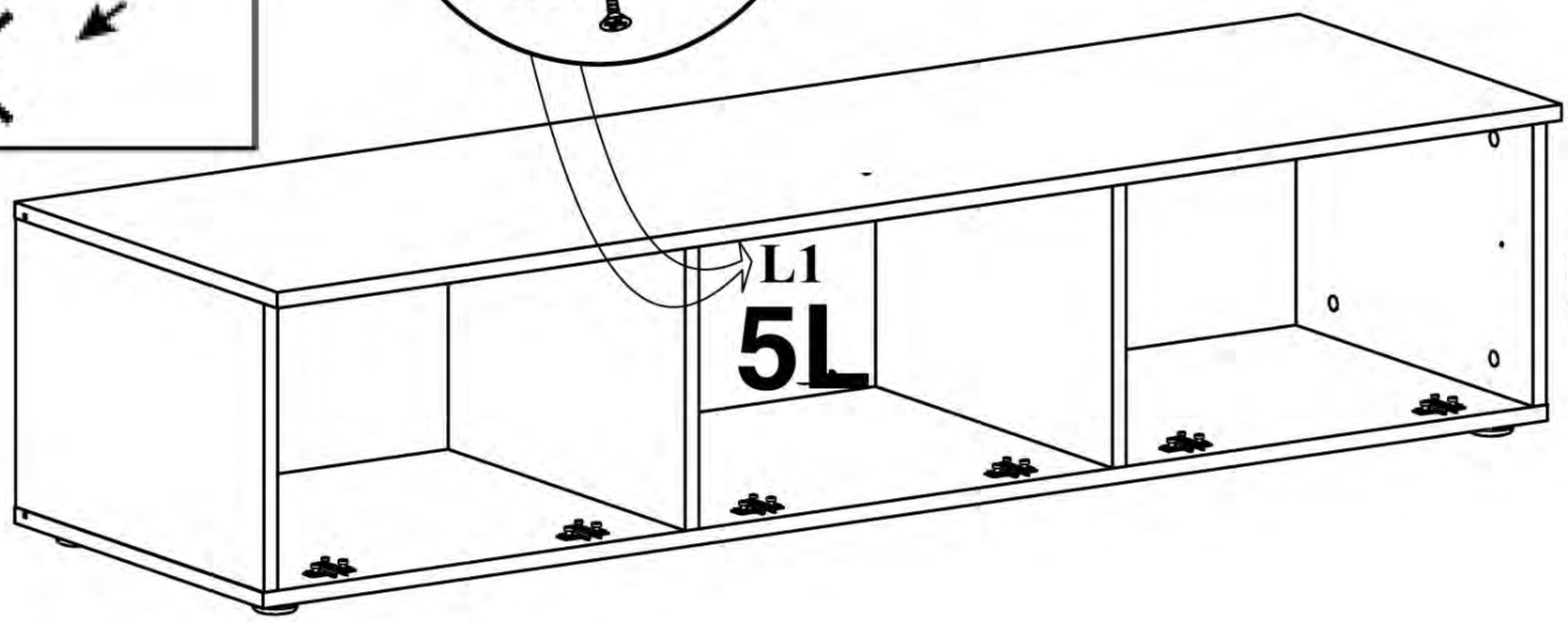

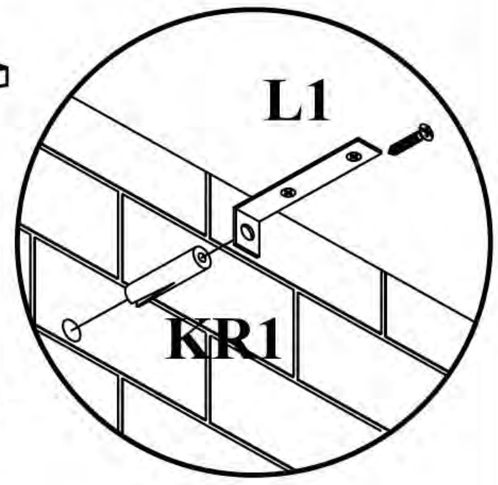

TYP 31 LOGO 3

8

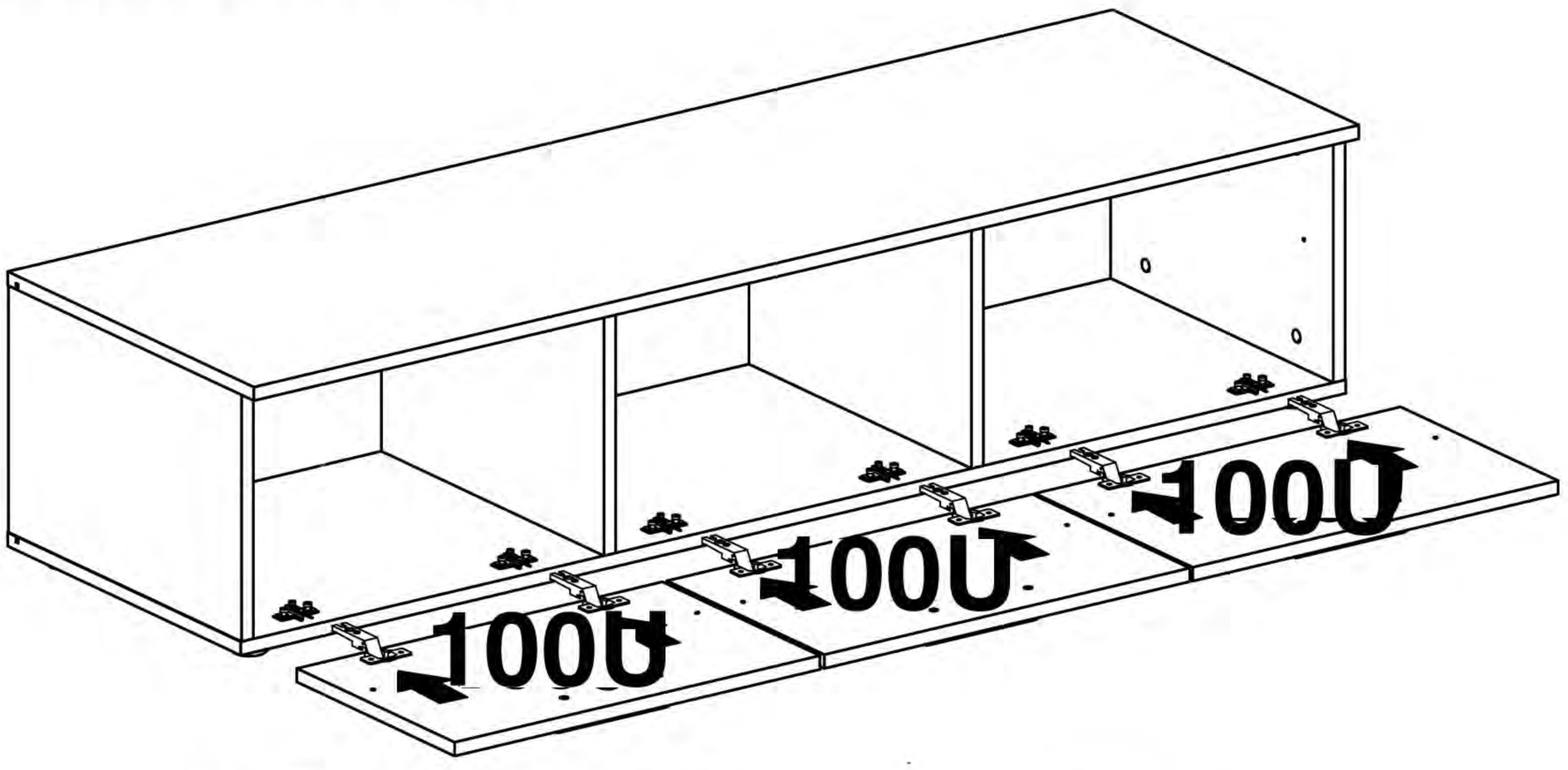

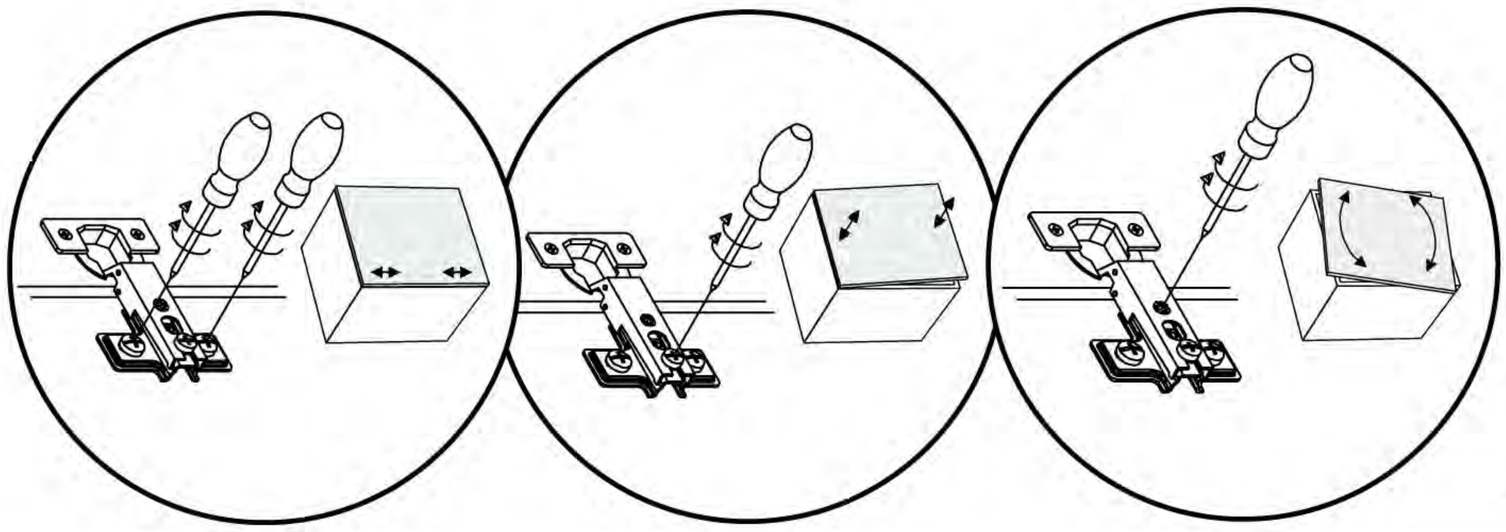

9

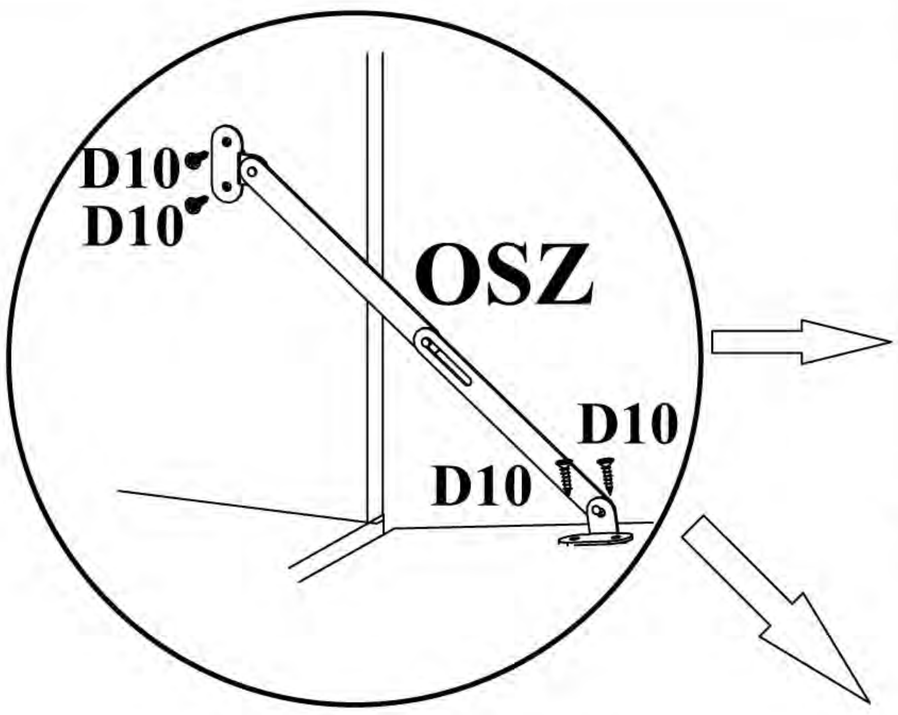

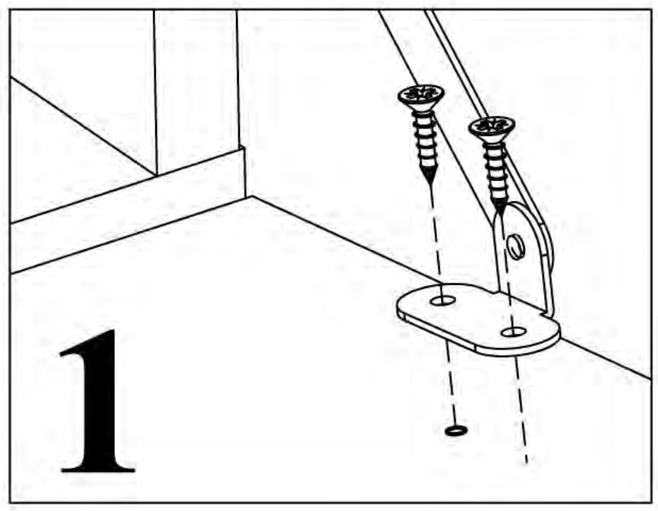

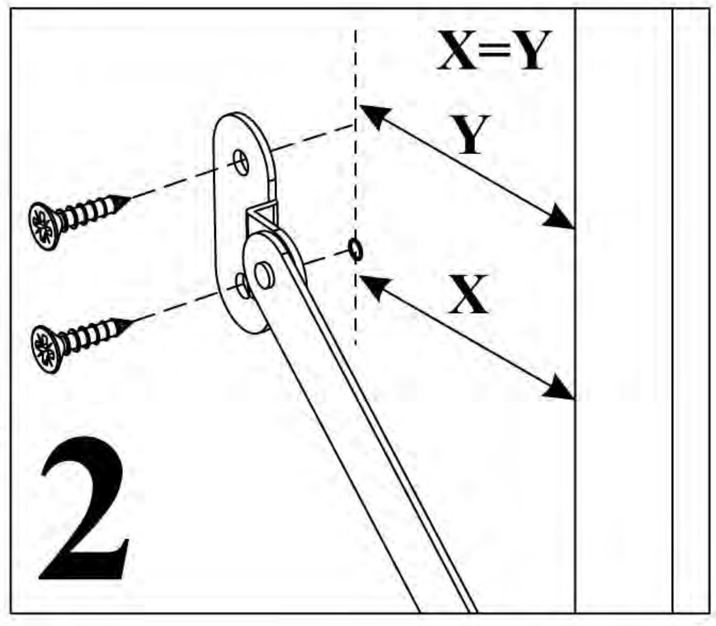

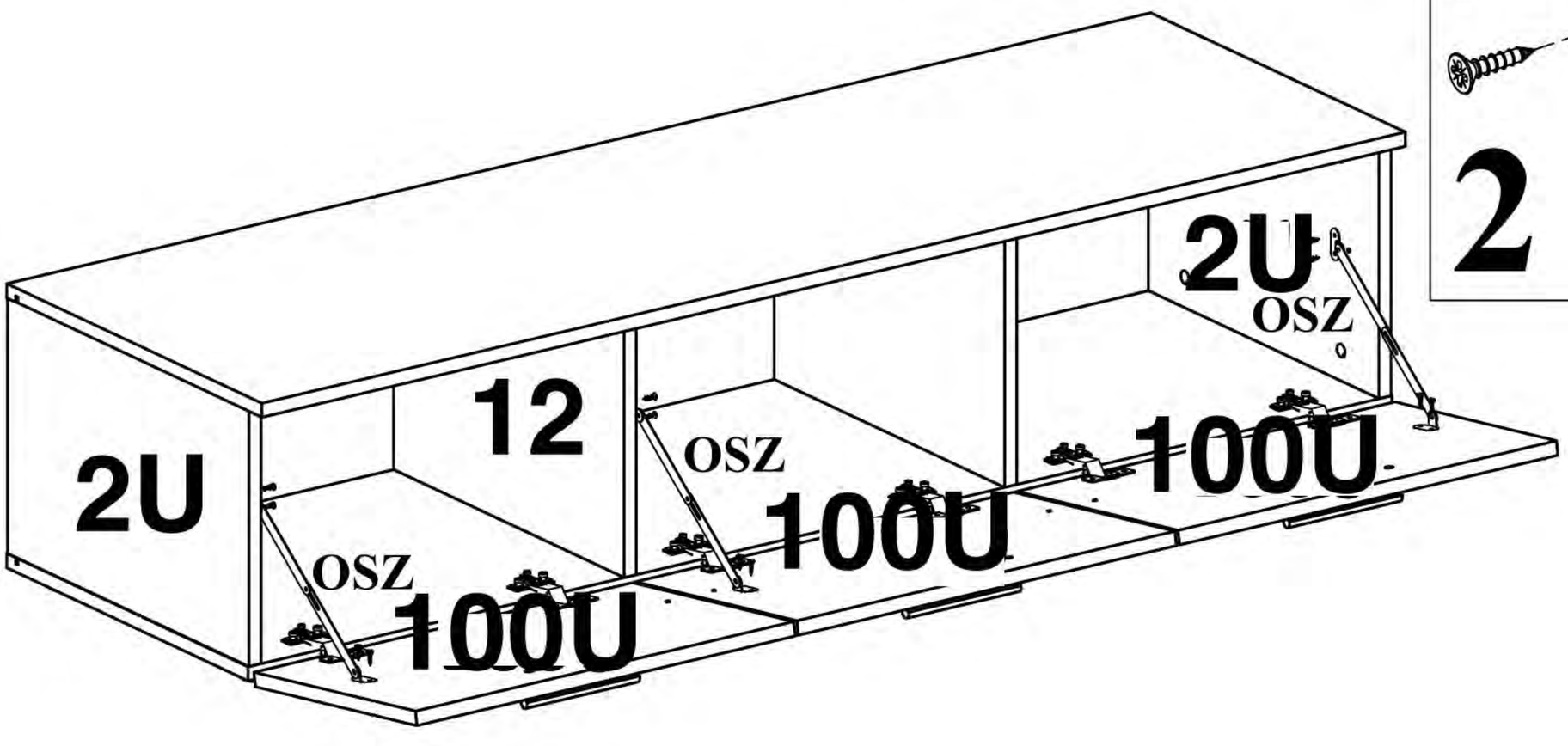

TYP20

PVC

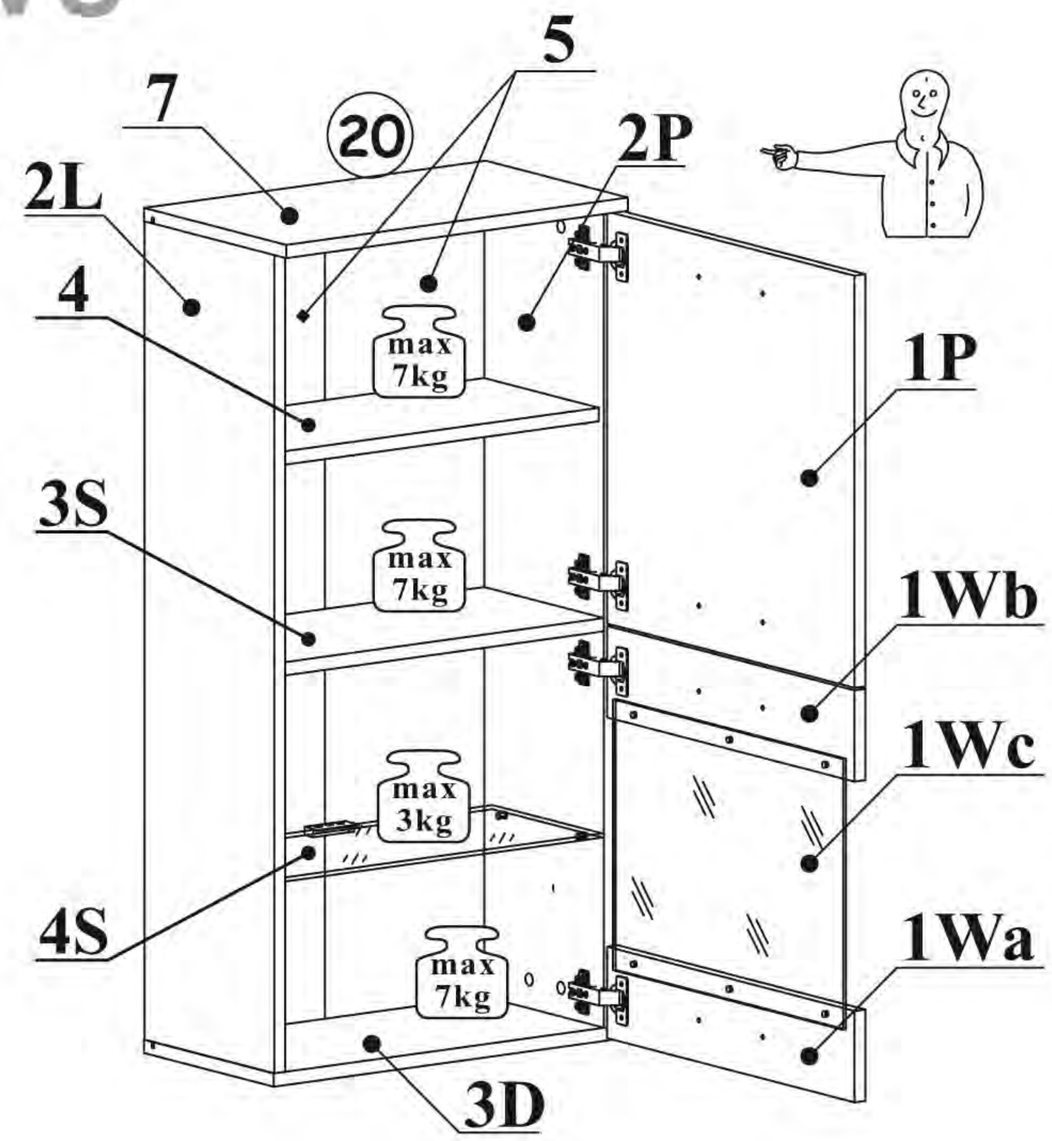

NO	Dim.		Col.-No	Qty
1P	496	496	6	1
1Wa	496	110	6	1
1Wb	496	110	6	1
1Wc	462	326	6	1
2L	985	260	5	1
2P	985	260	5	1
3D	500	260	5	1
3S	466	240	5	1
4	466	230	5	1
4S	465	220	5	1
5	239	997	5	2
7	500	285	5	1

BASIC

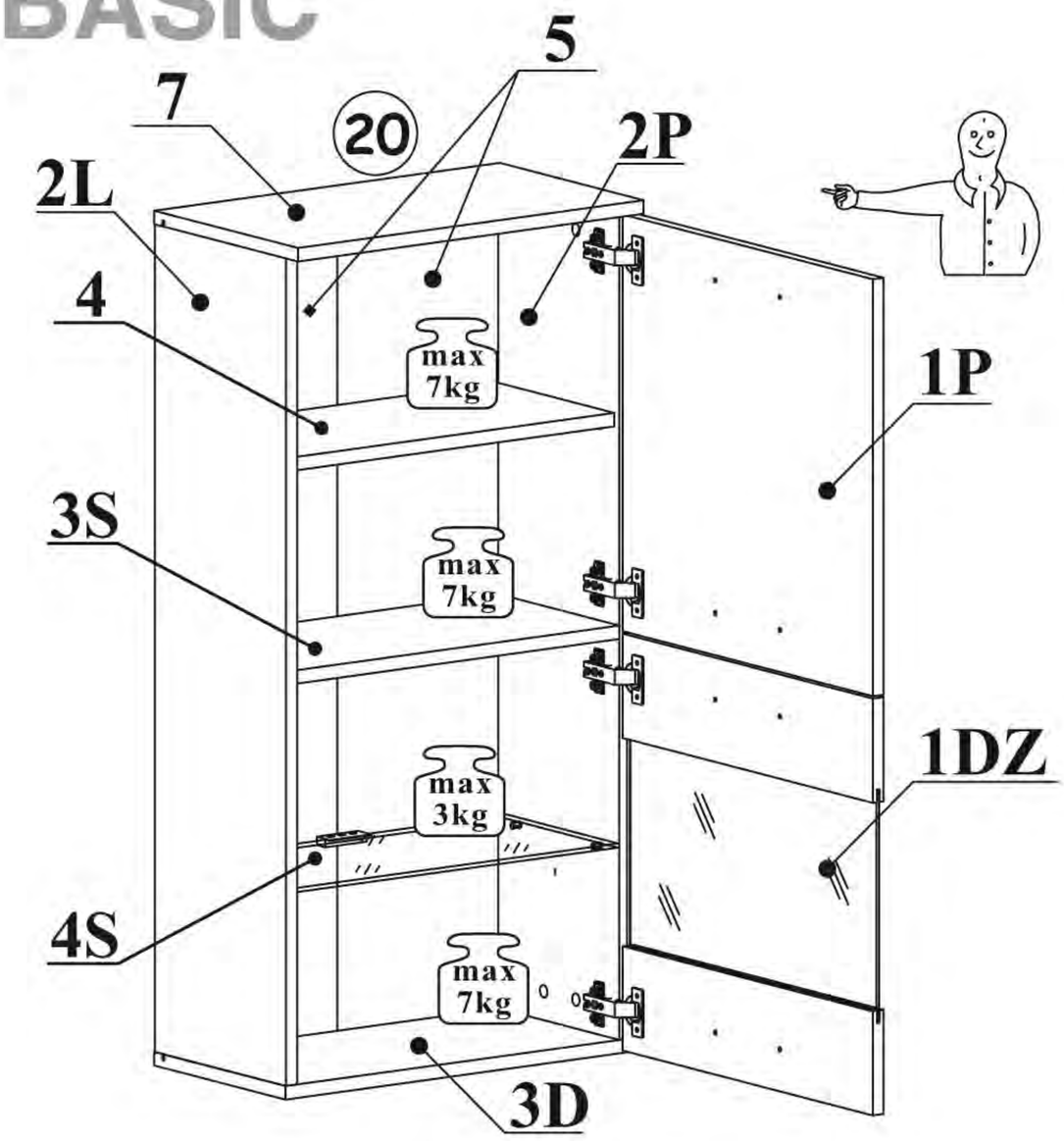

NO	Dim.		Col.-No	Qty
1P	496	496	6	1
2L	985	260	5	1
2P	985	260	5	1
3D	500	260	5	1
3S	466	240	5	1
4	466	230	5	1
4S	465	220	5	1
5	239	997	5	2
7	500	285	5	1
1DZ	496	496	6	1

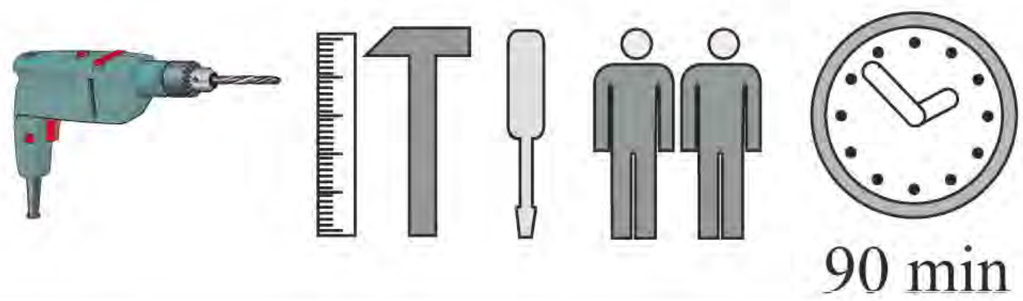

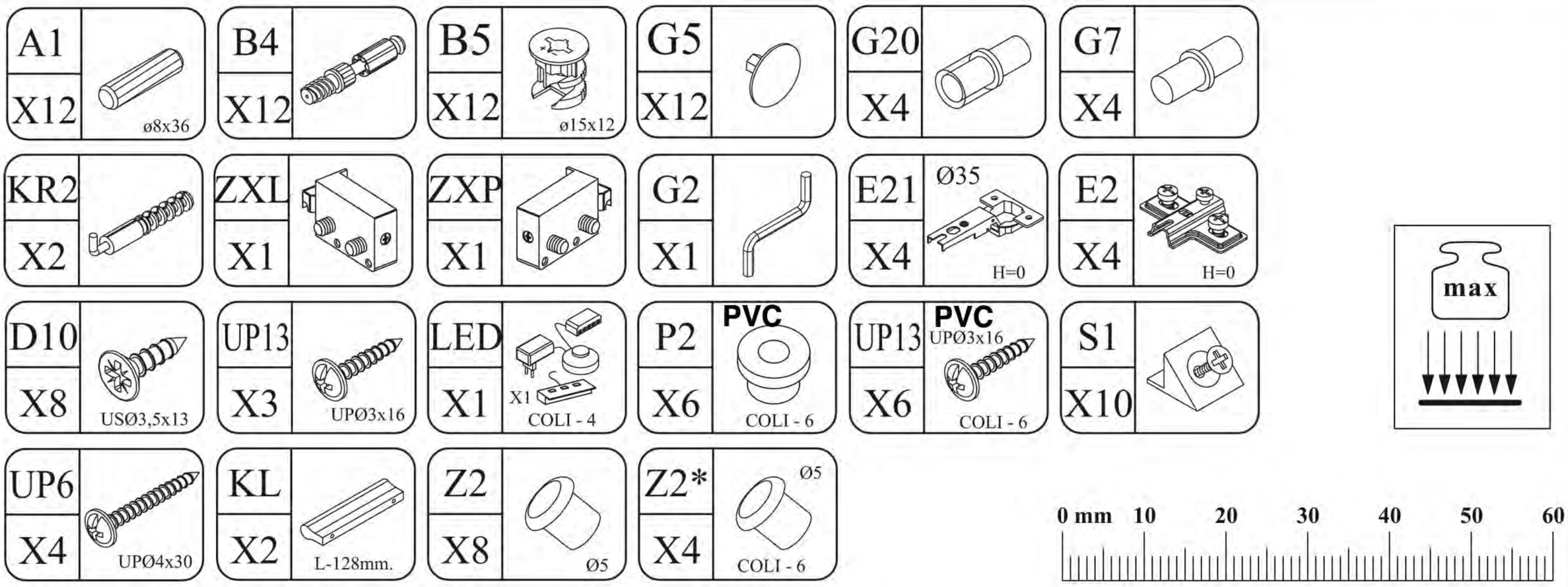

TYP 20 LOGO 3

1

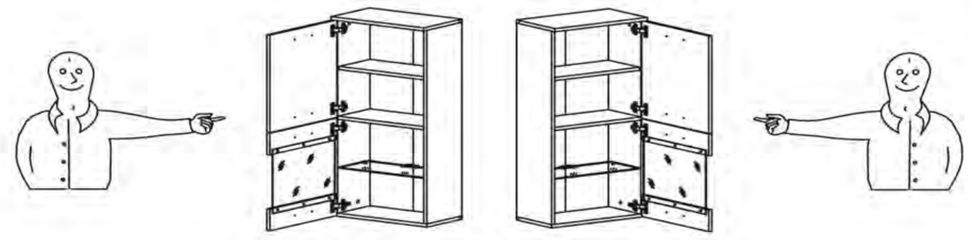

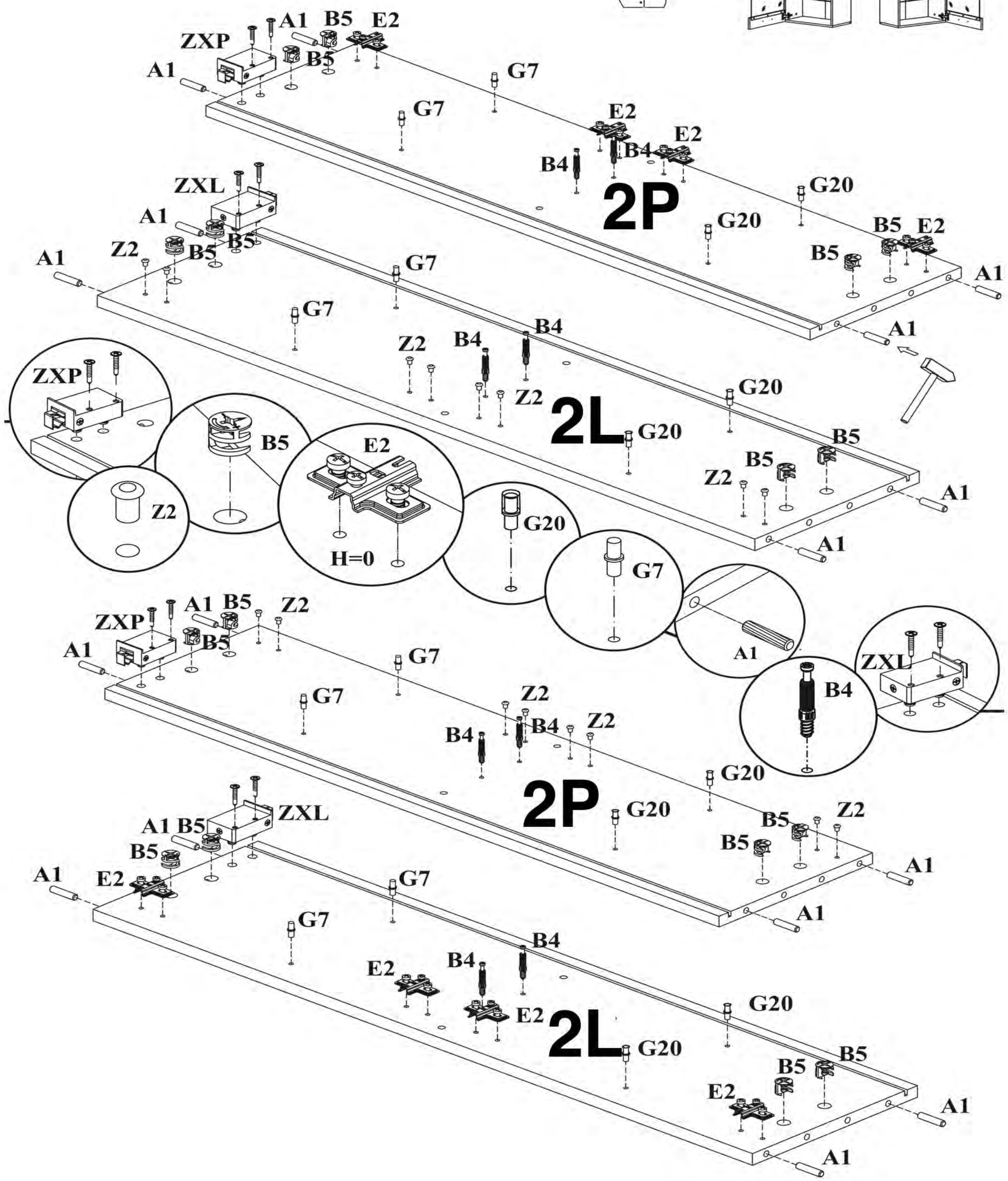

2

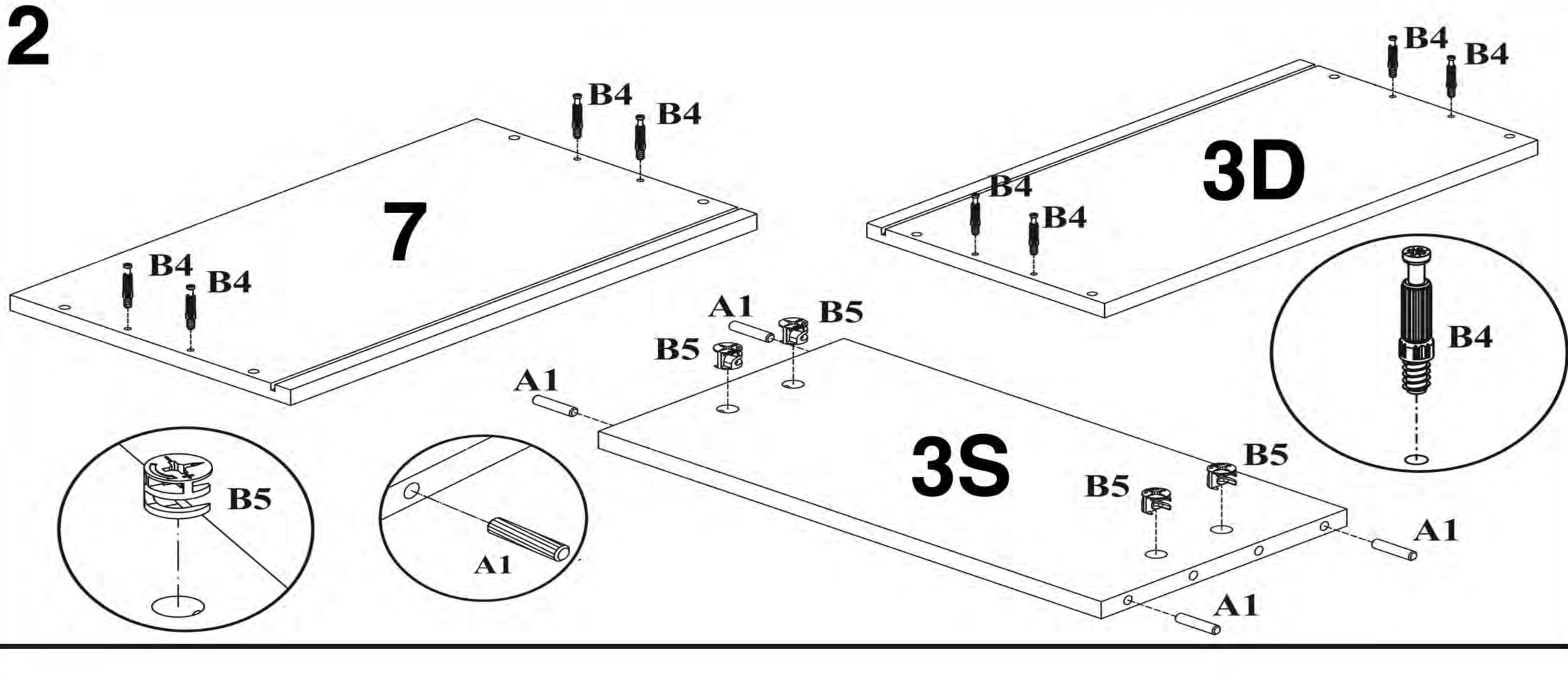

TYP 20 LOGO 3

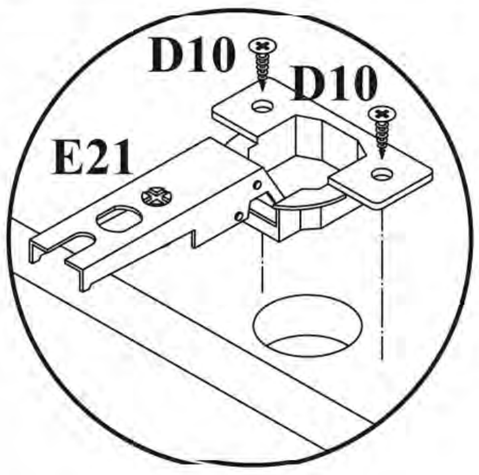

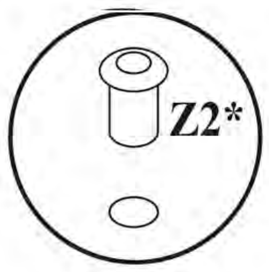

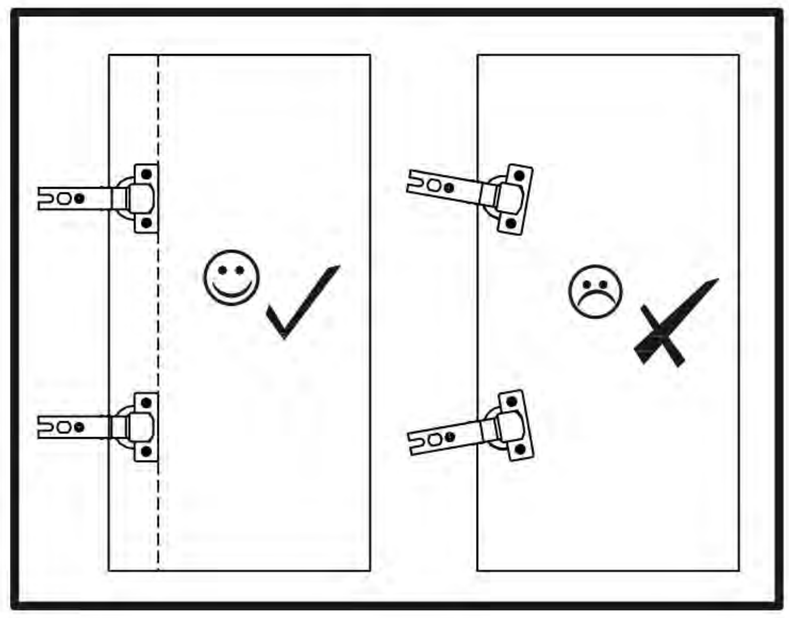

3 PVC R

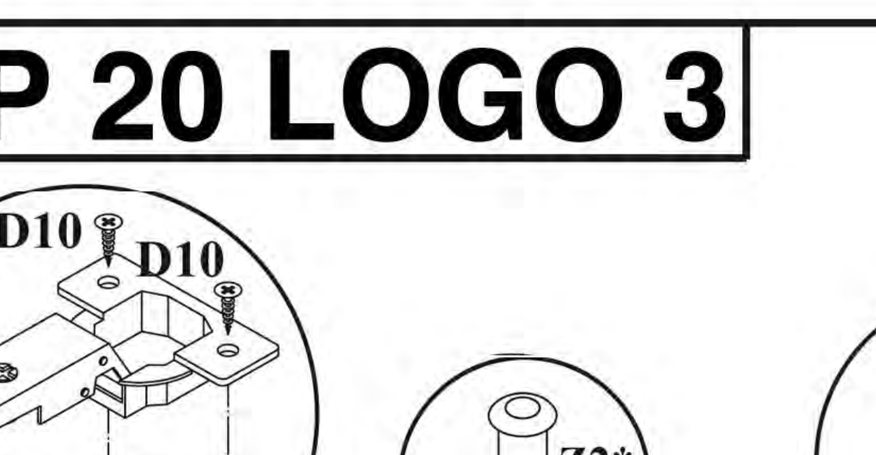

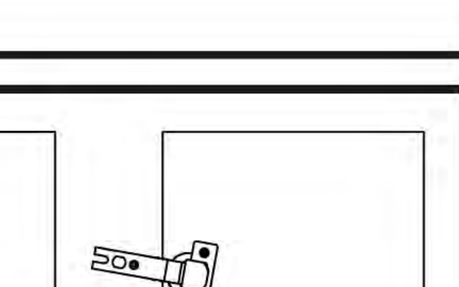

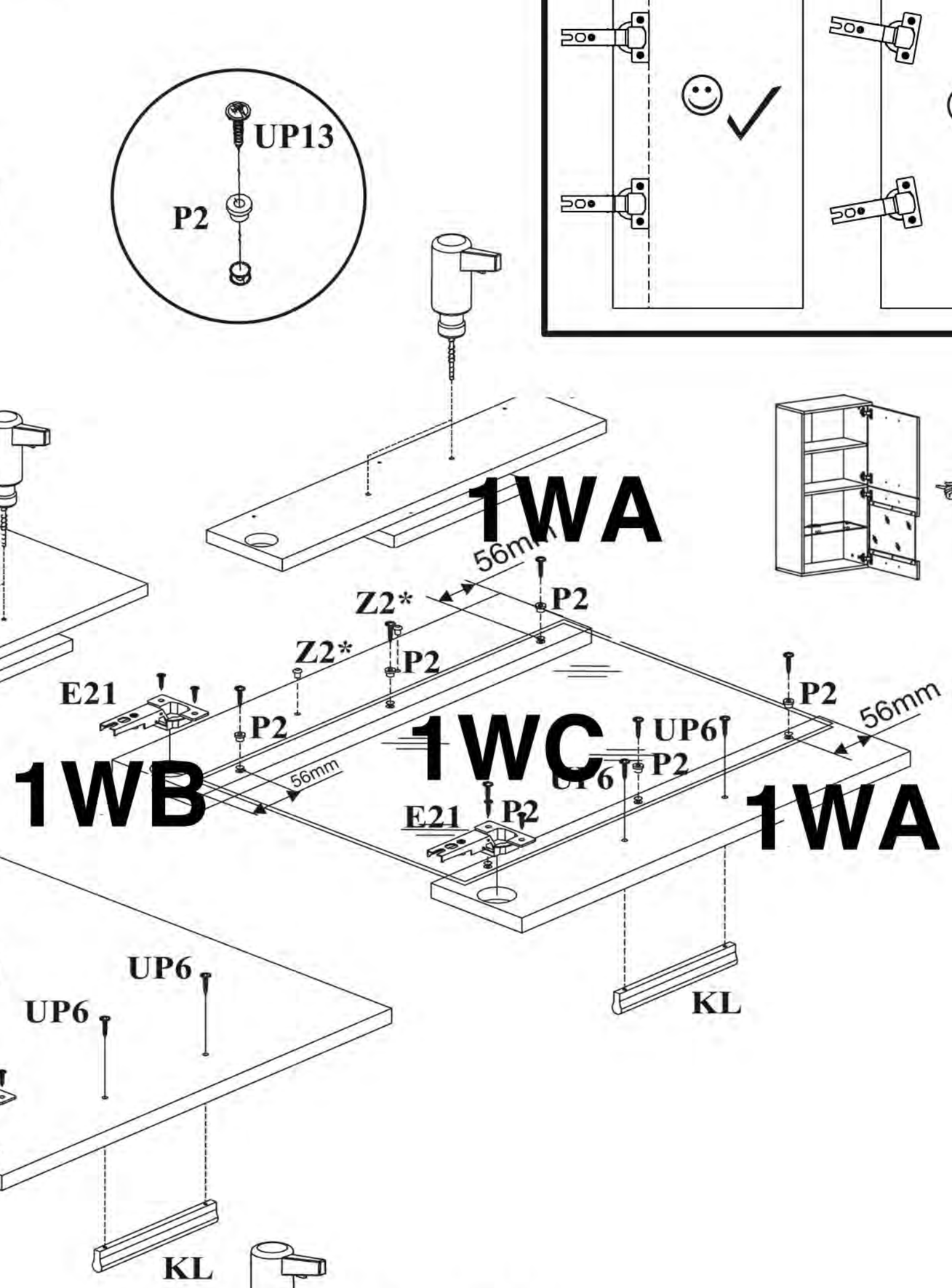

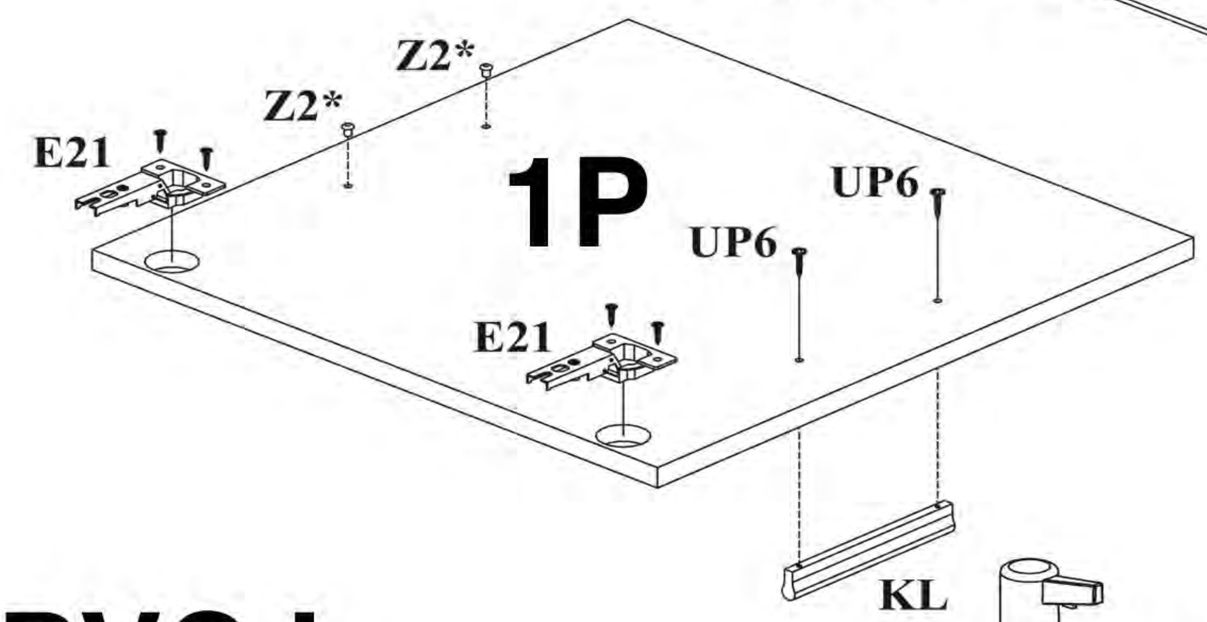

PVC L

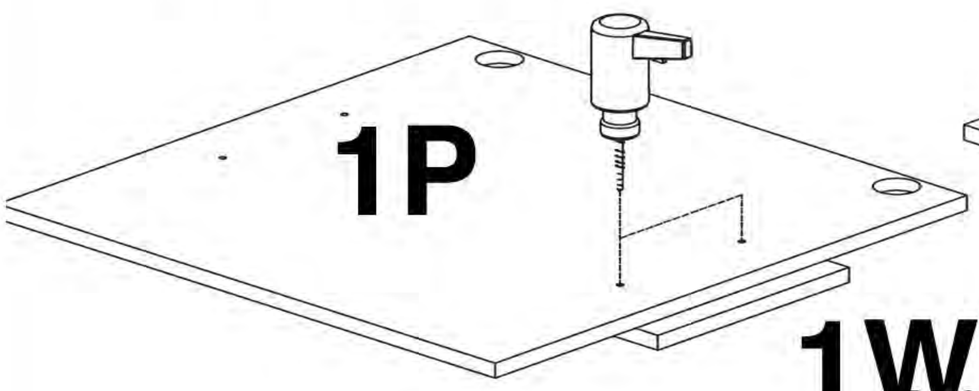

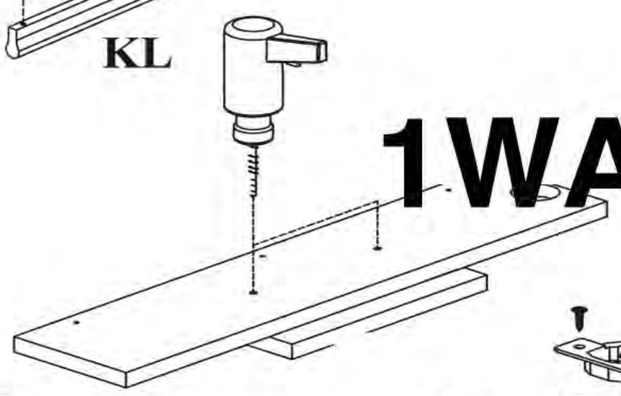

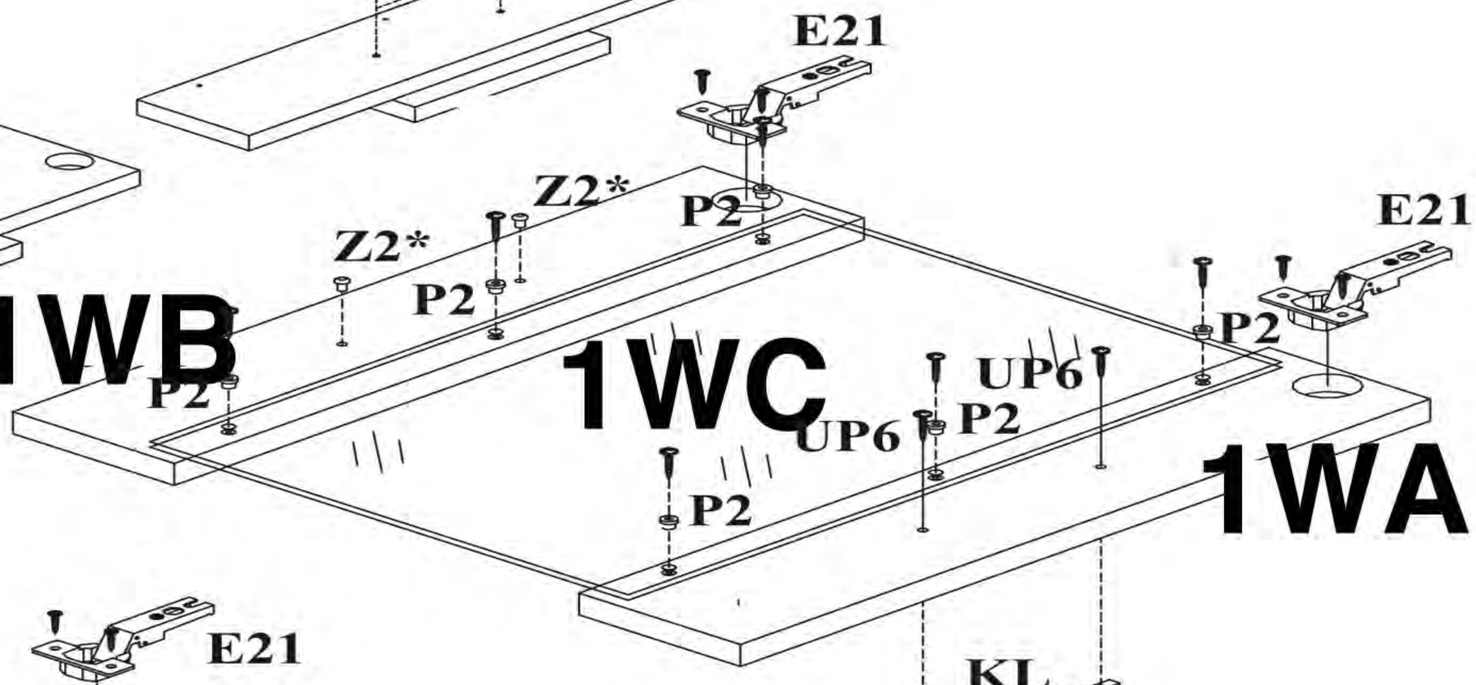

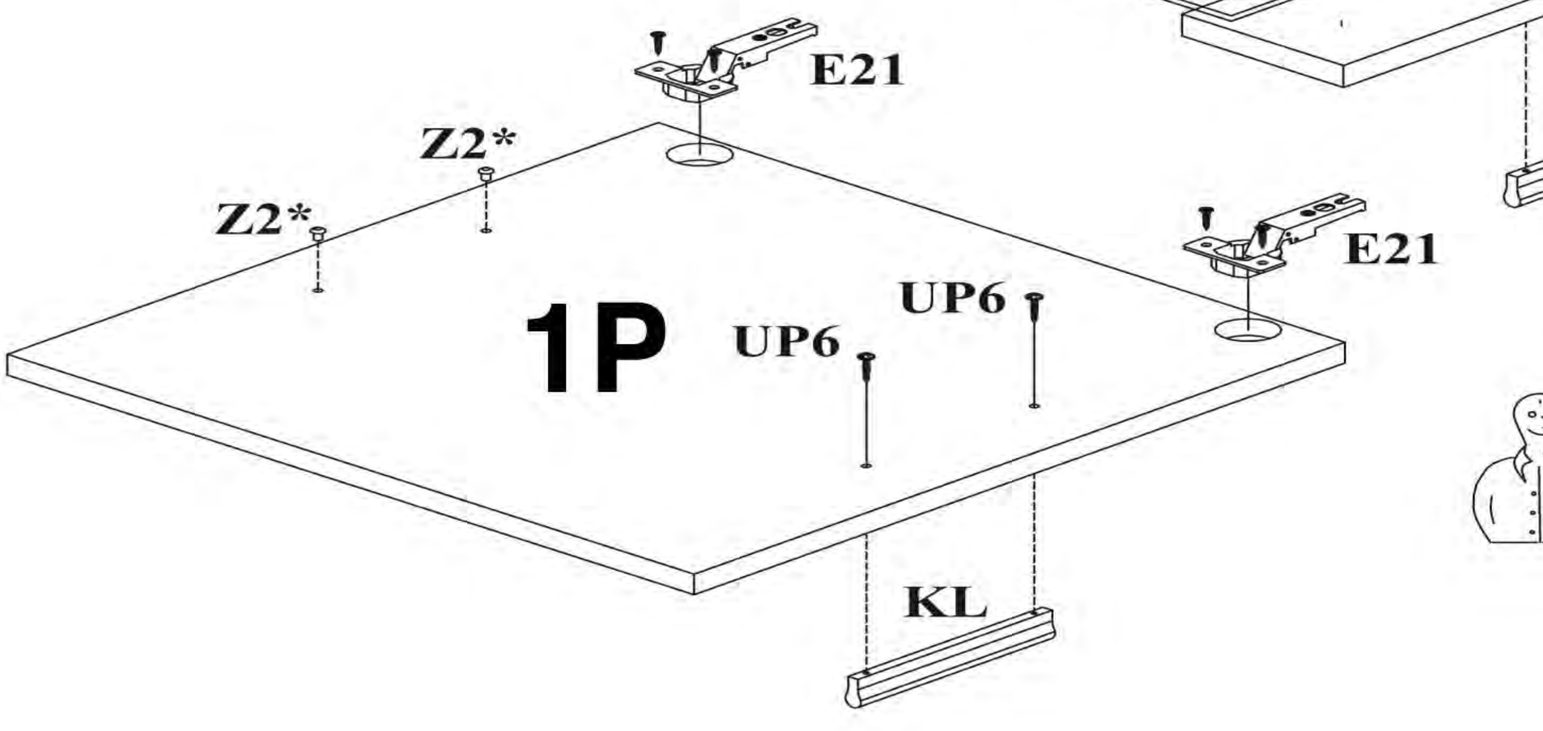

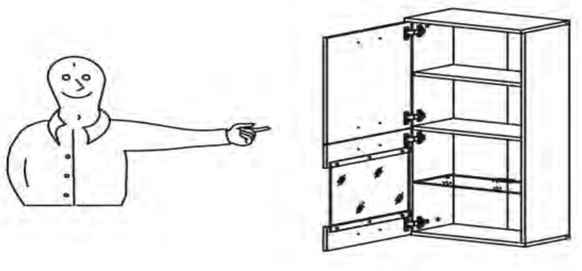

TYP 20 LOGO 3 BASIC

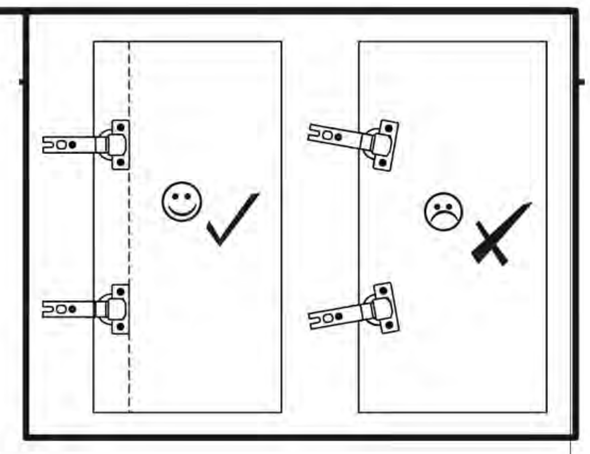

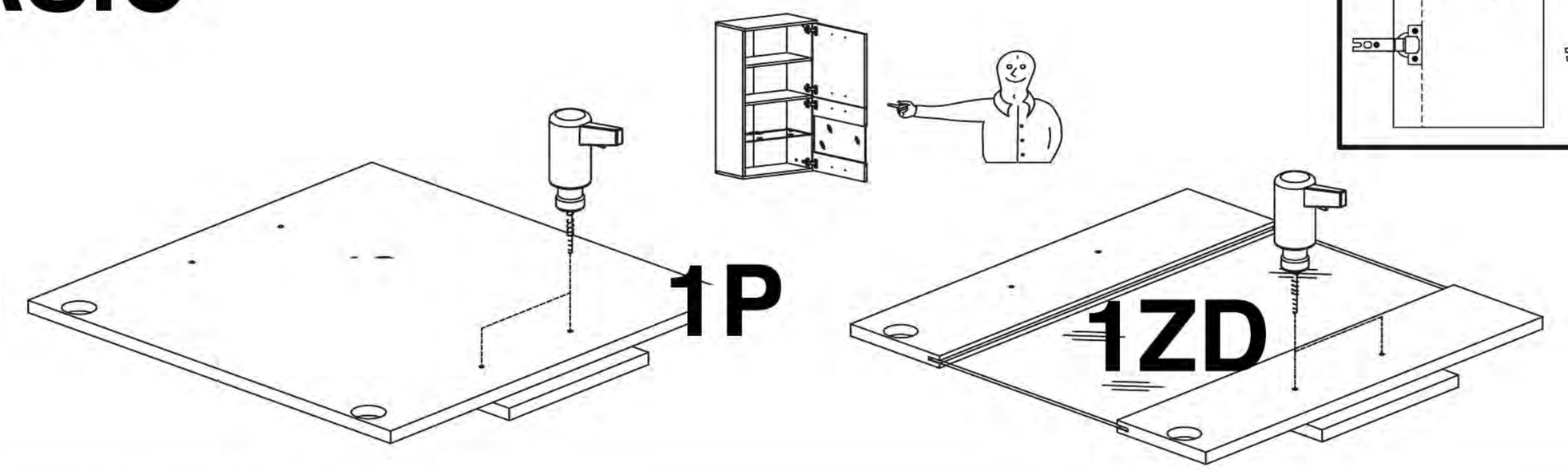

3 BASIC R

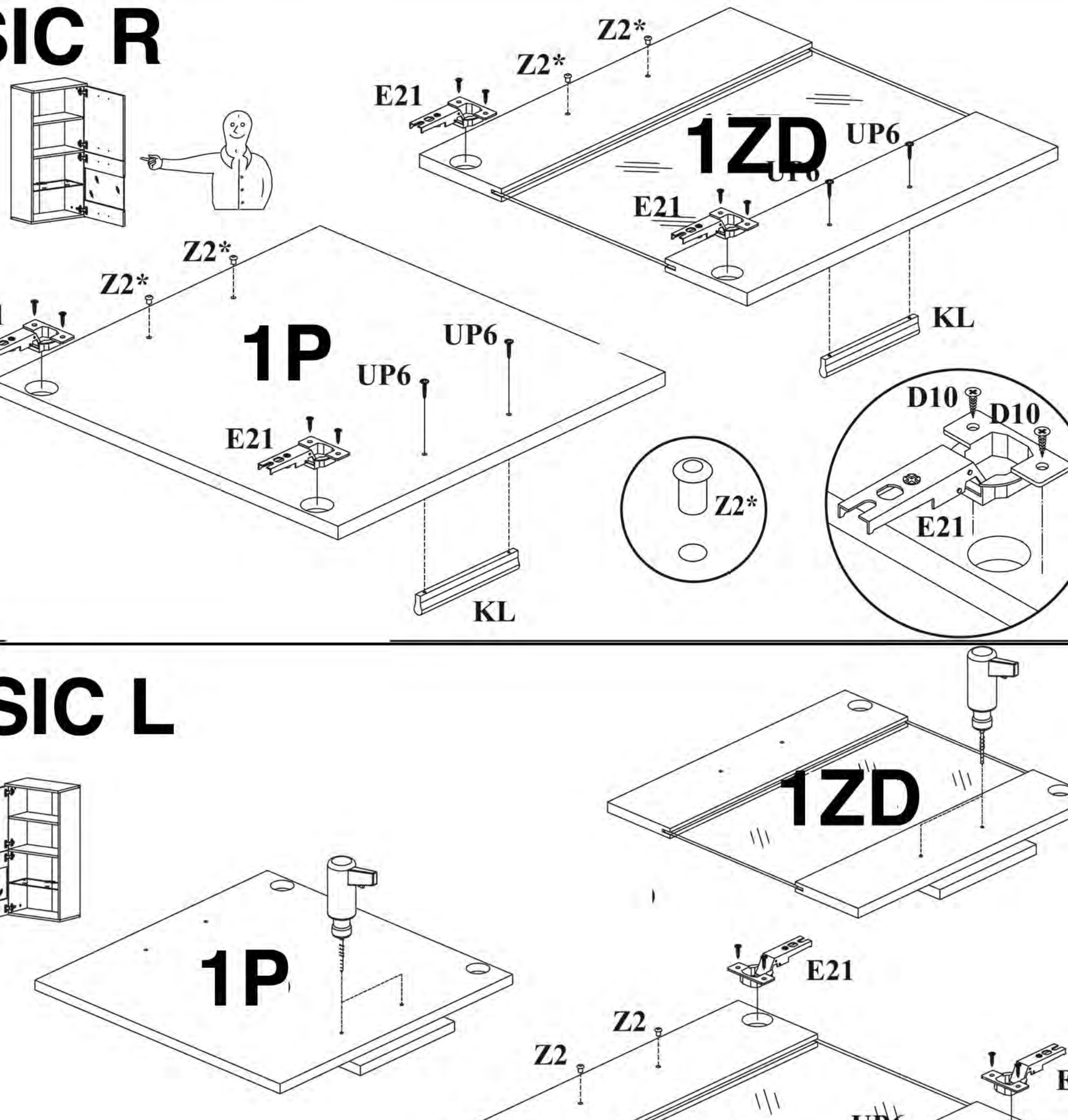

3 BASIC L

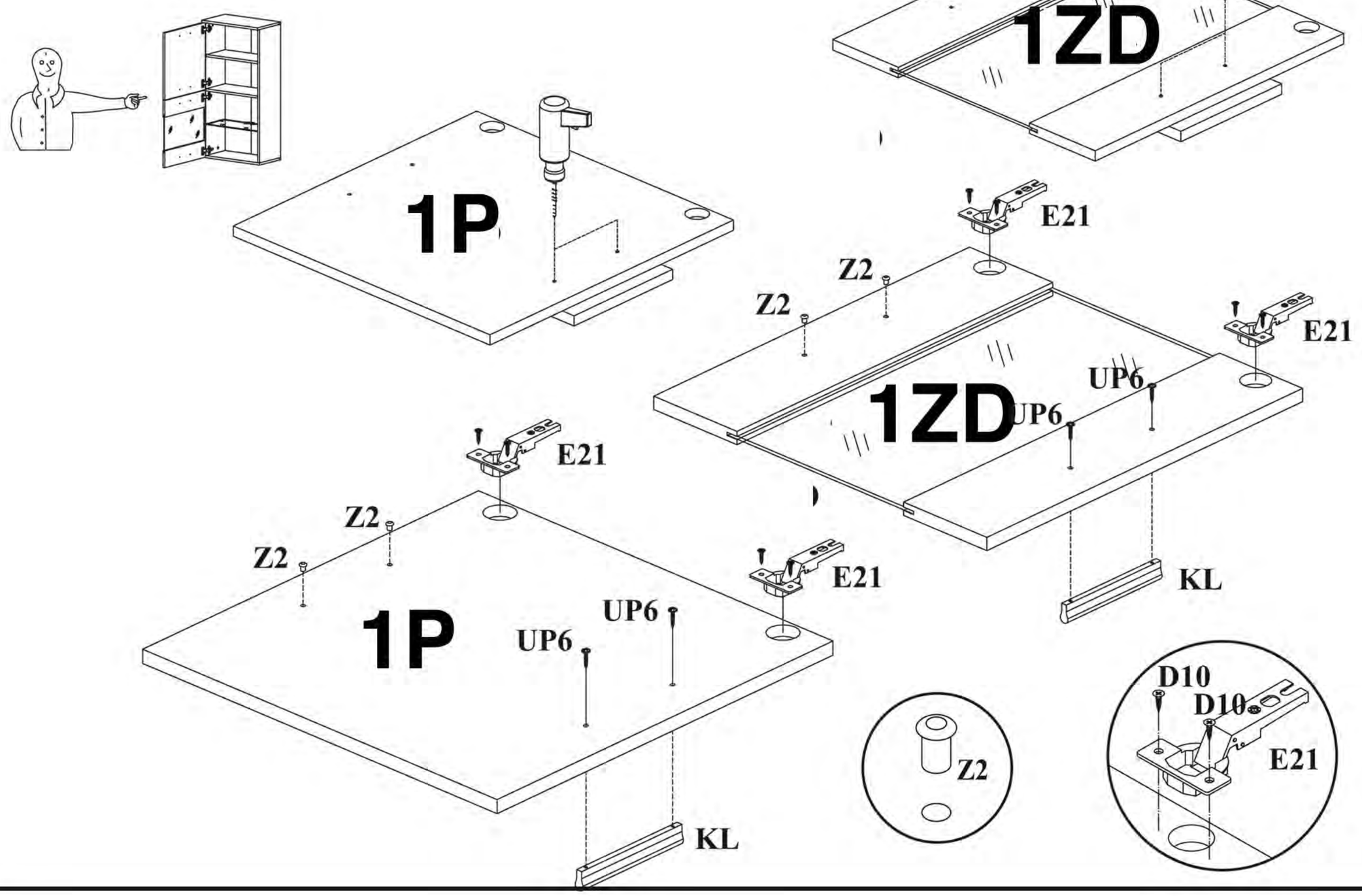

TYP 20 LOGO 3

4

A)

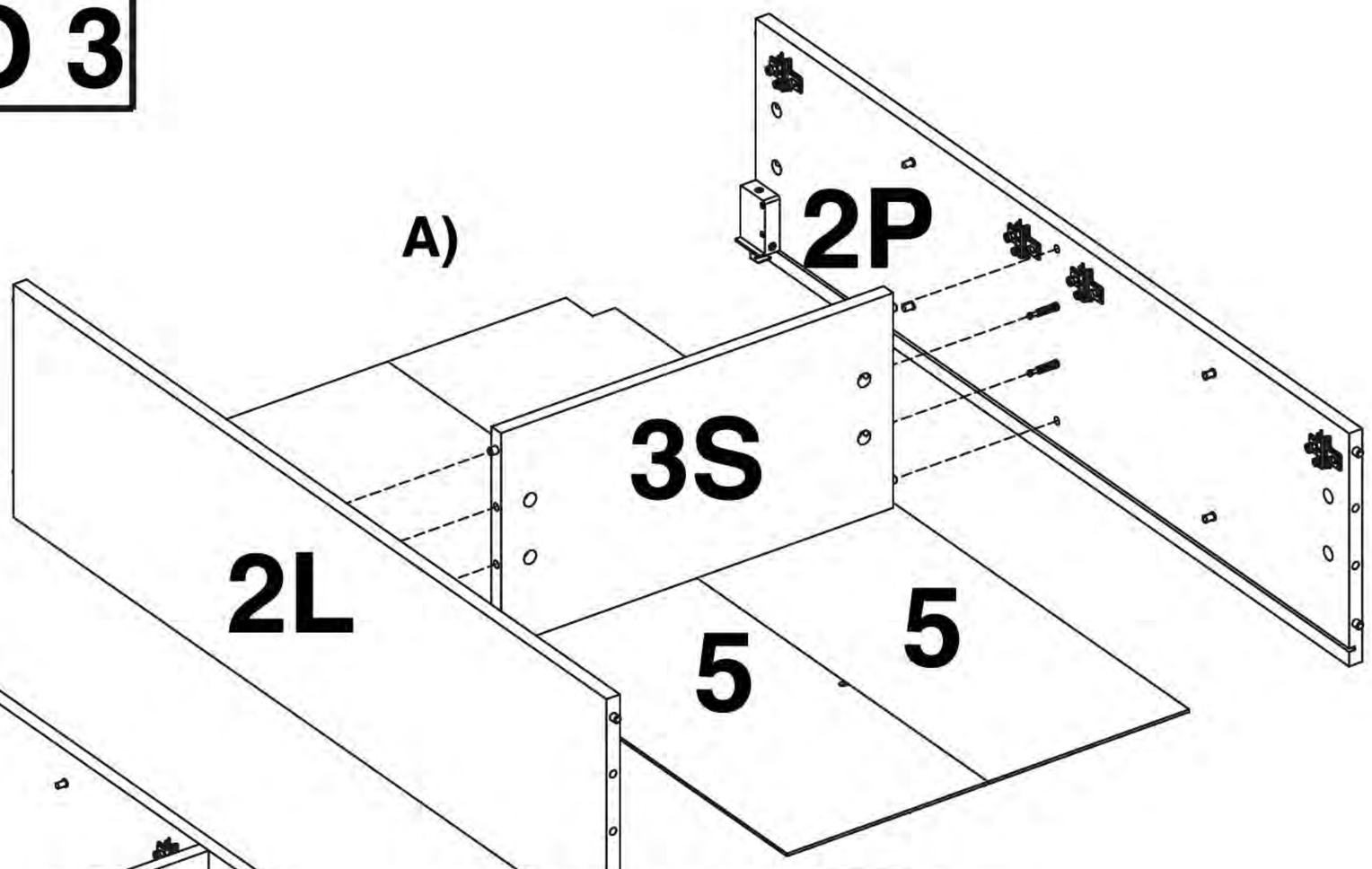

B)

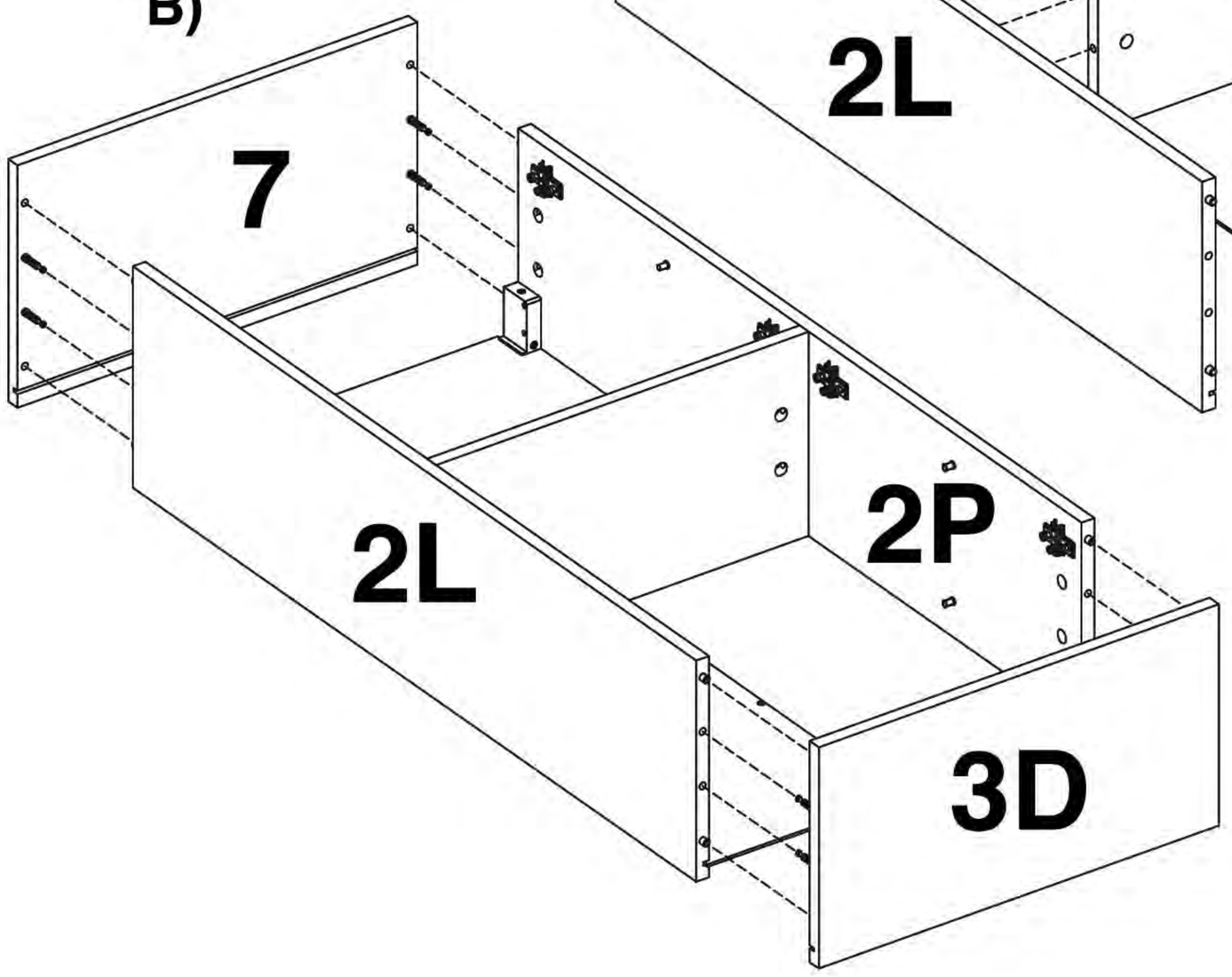

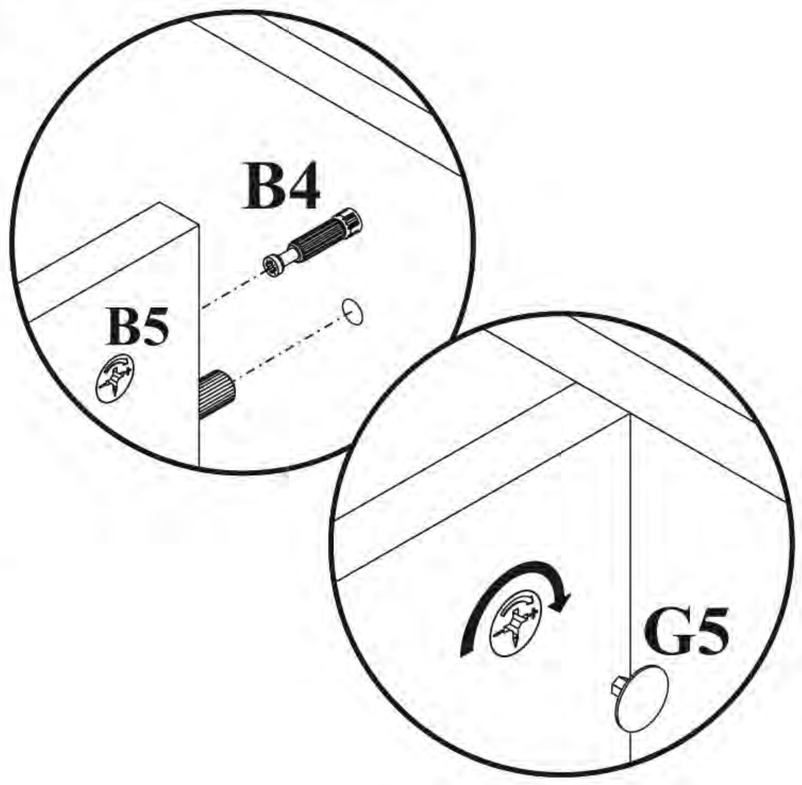

5

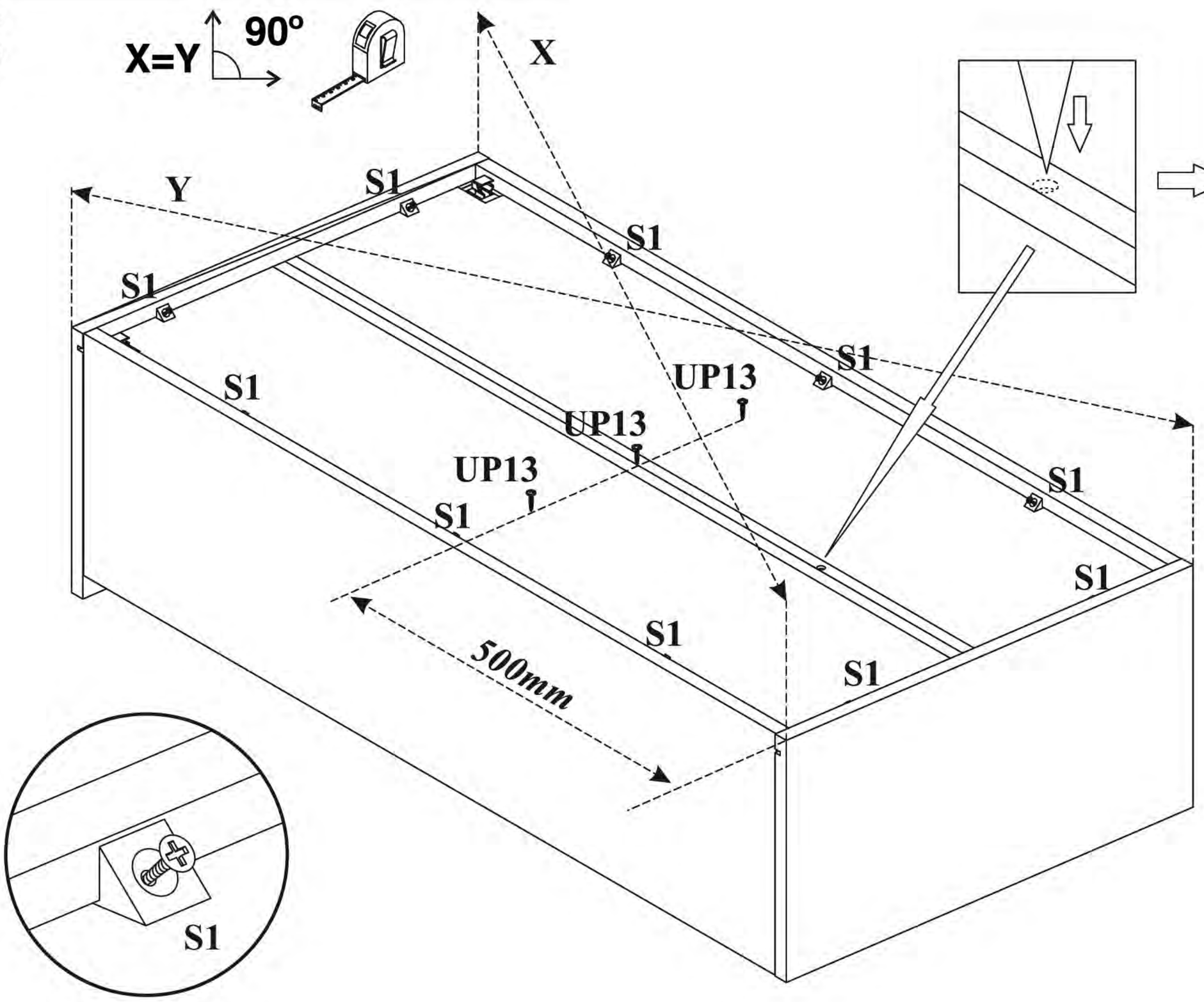

TYP 20 LOGO 3

6

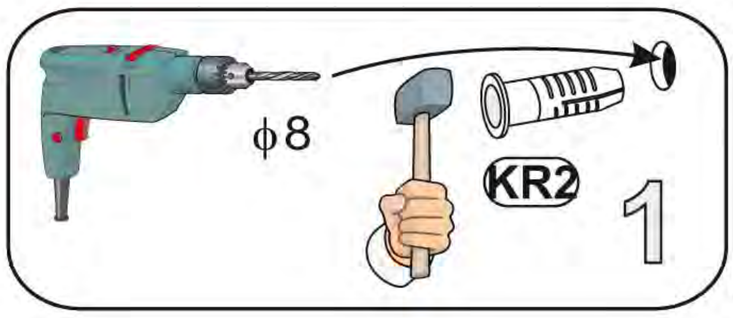

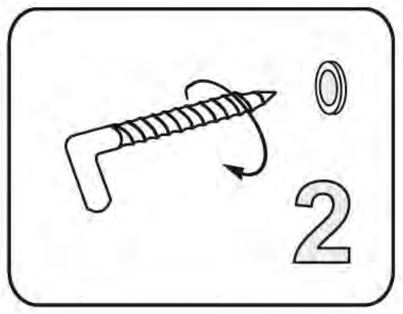

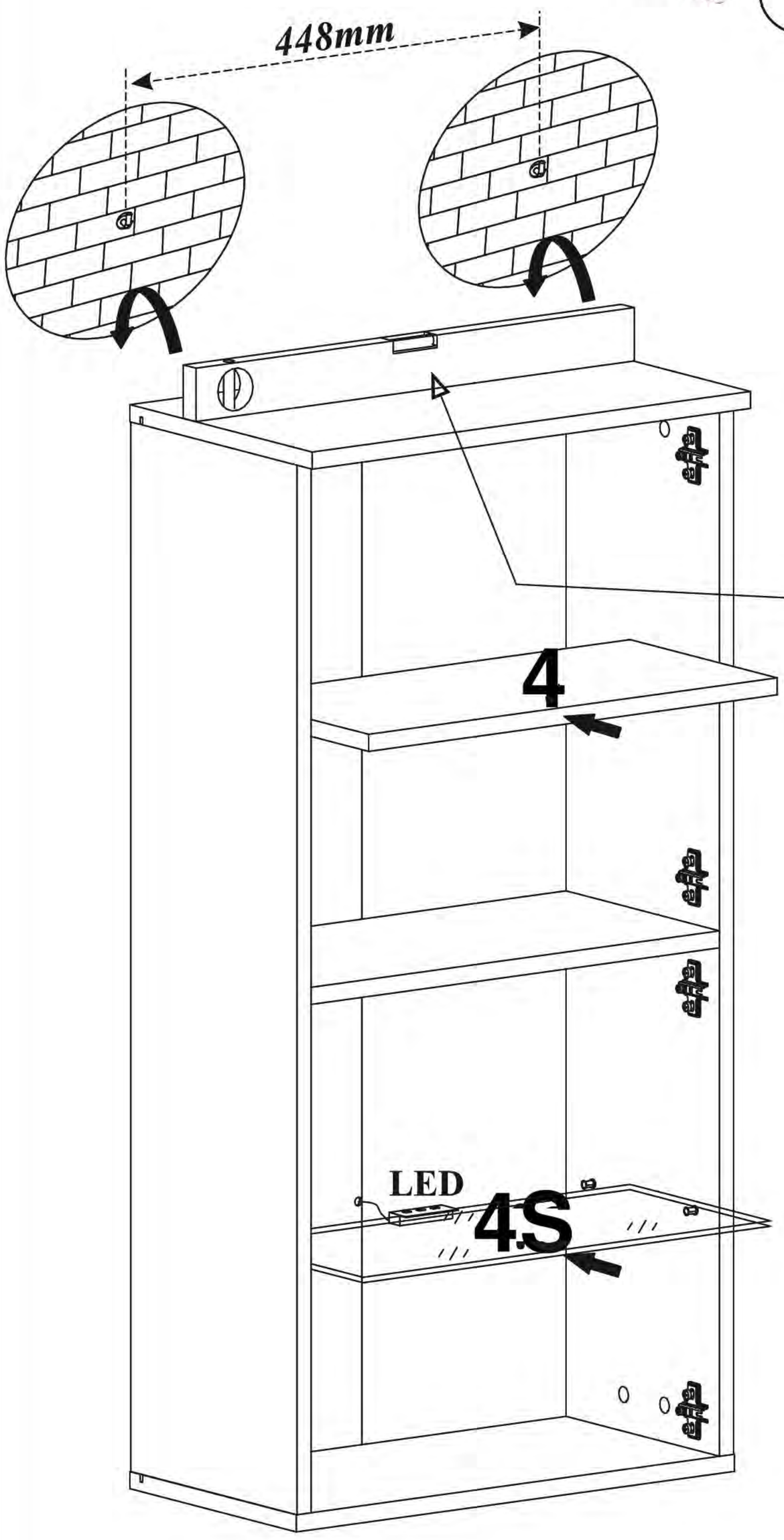

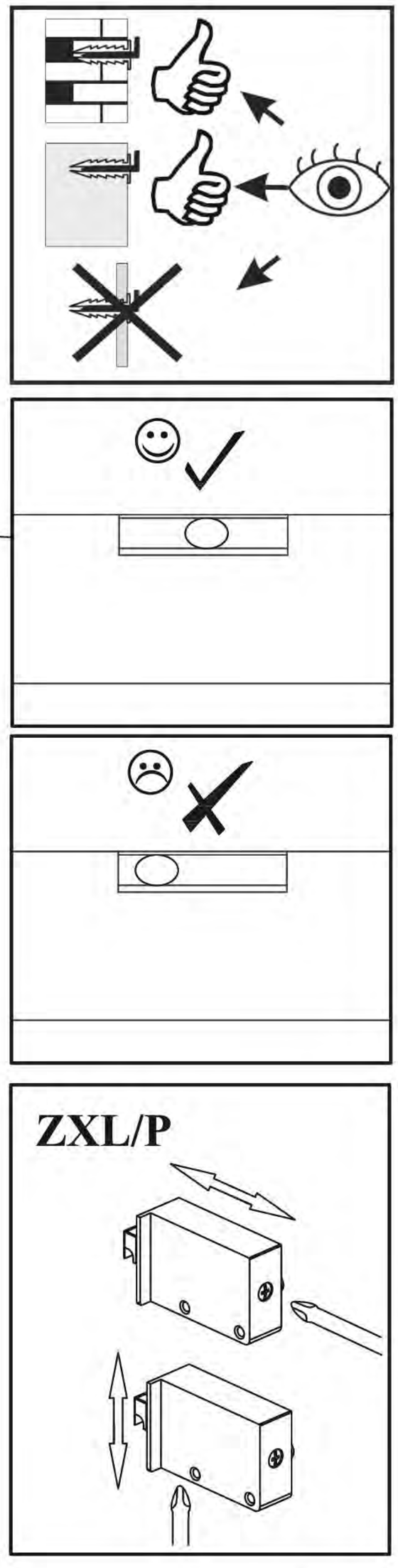

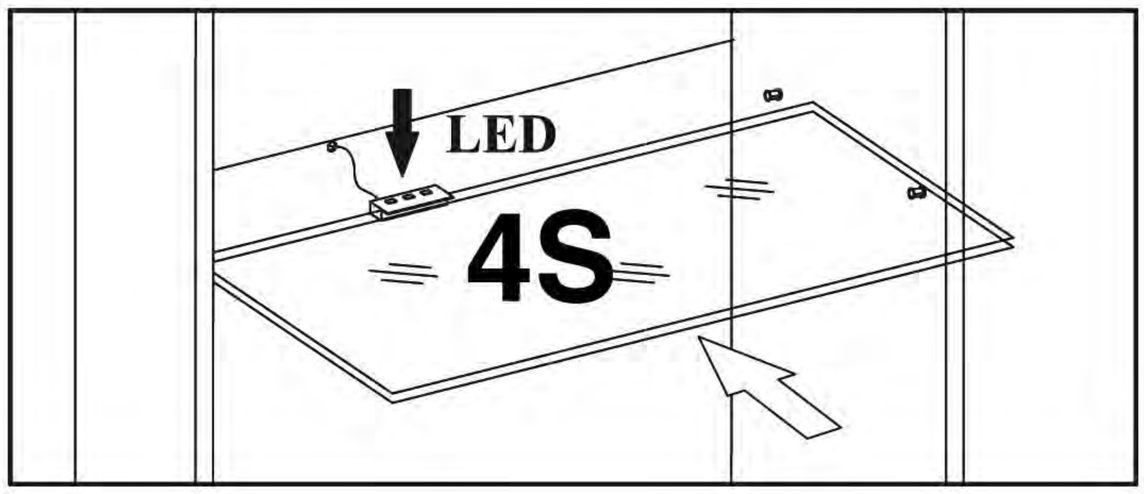

TYP 20 LOGO 3

7

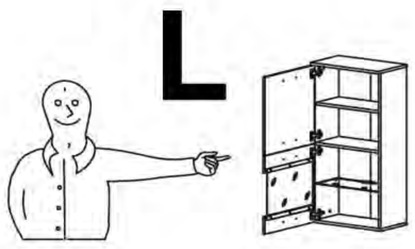

PVC

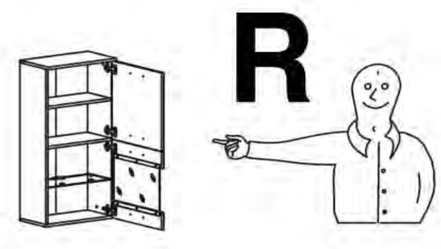

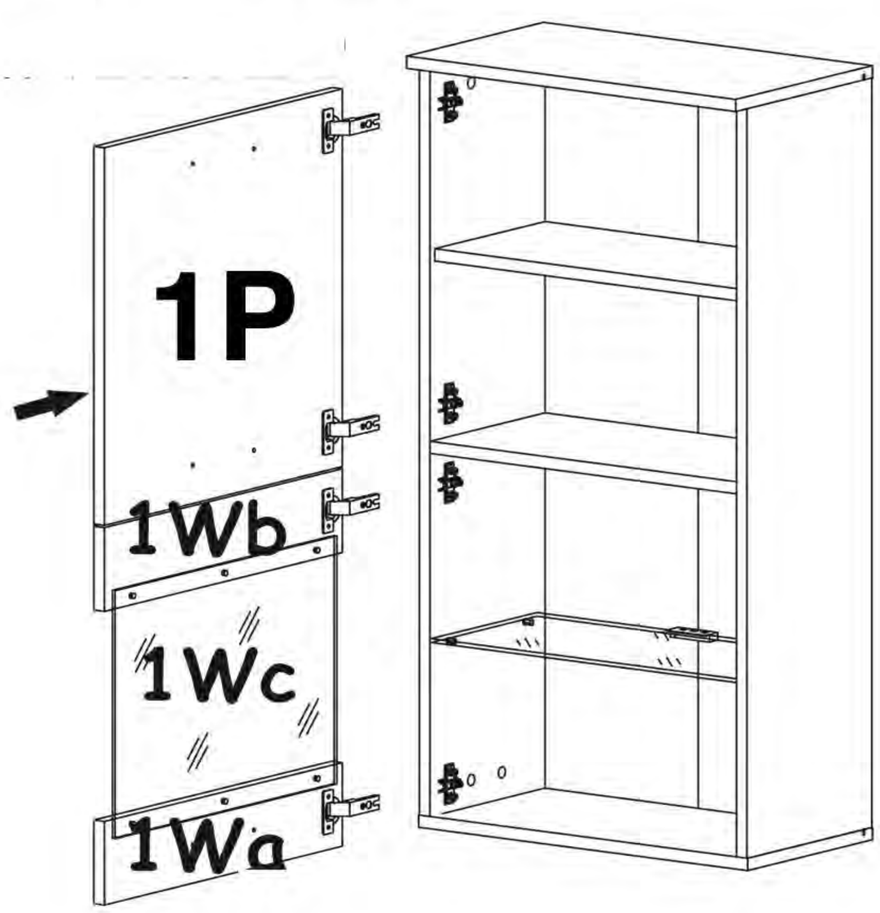

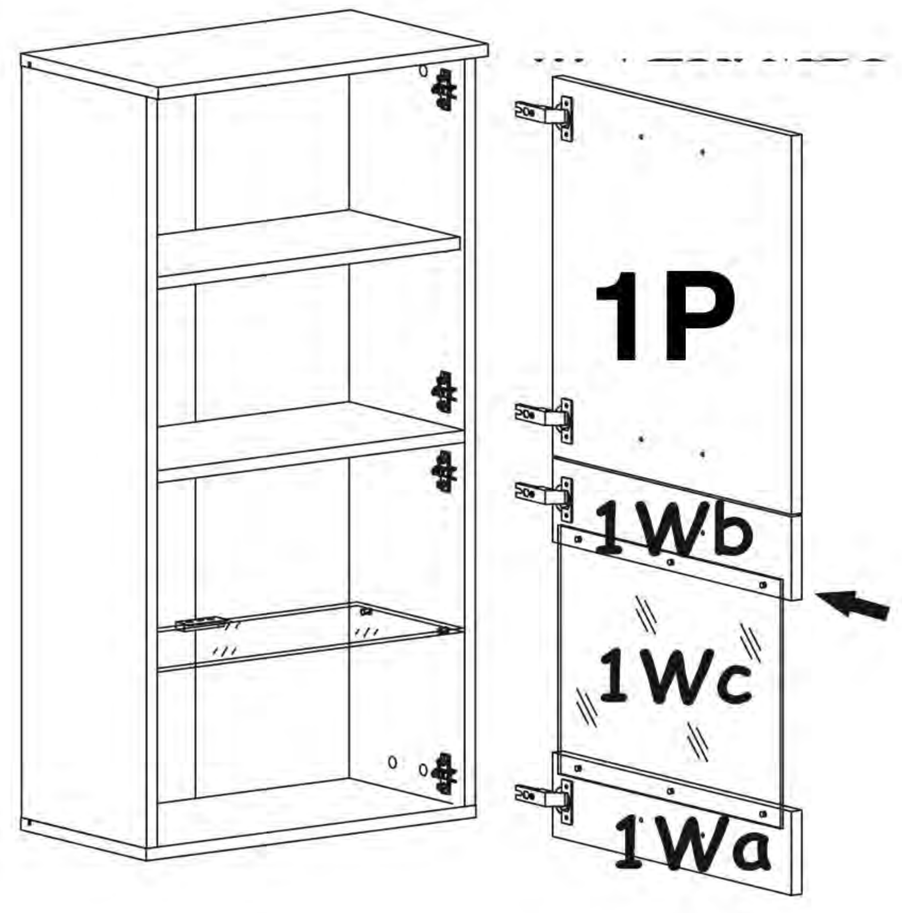

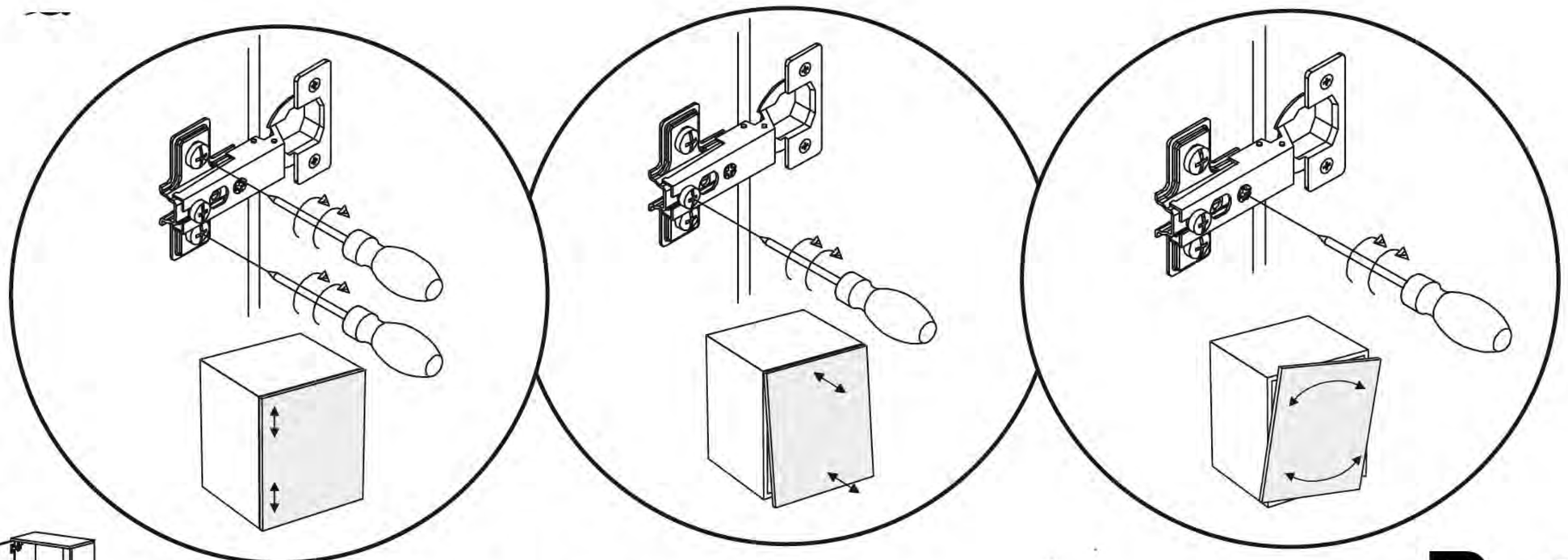

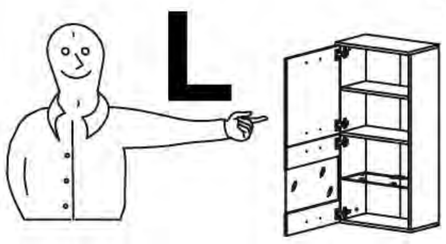

BASIC

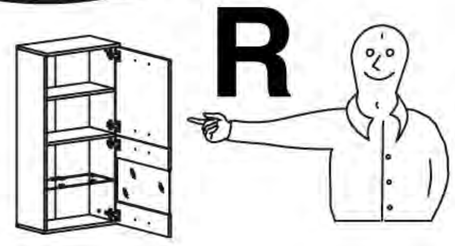

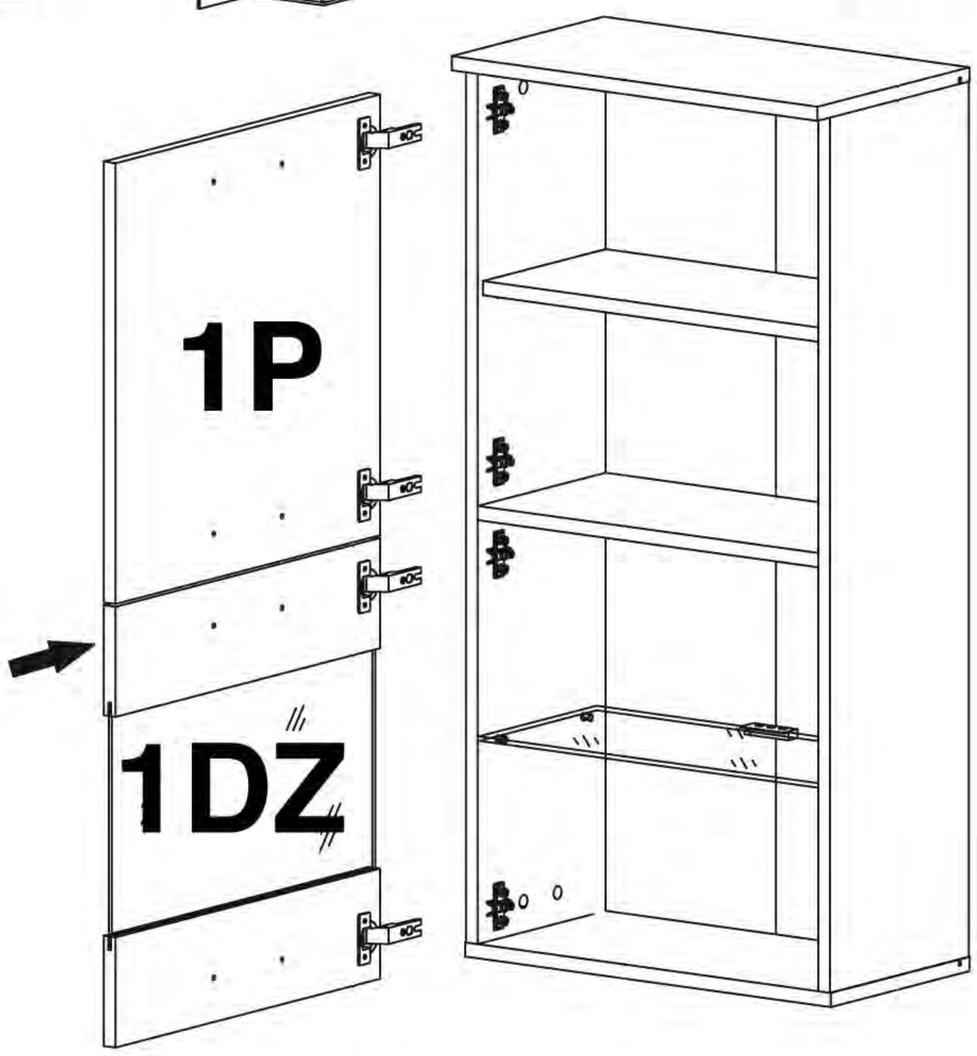

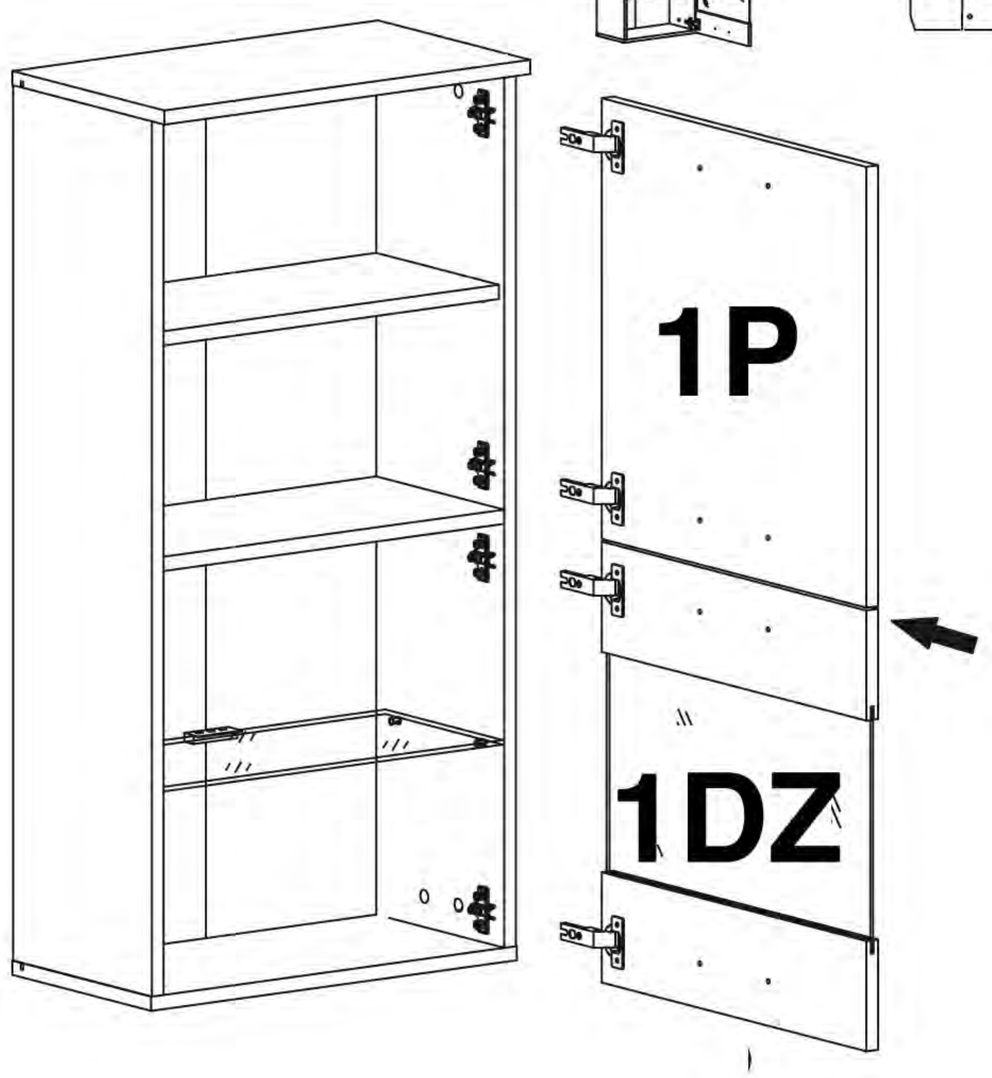

TYP22

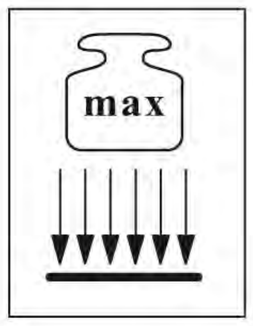

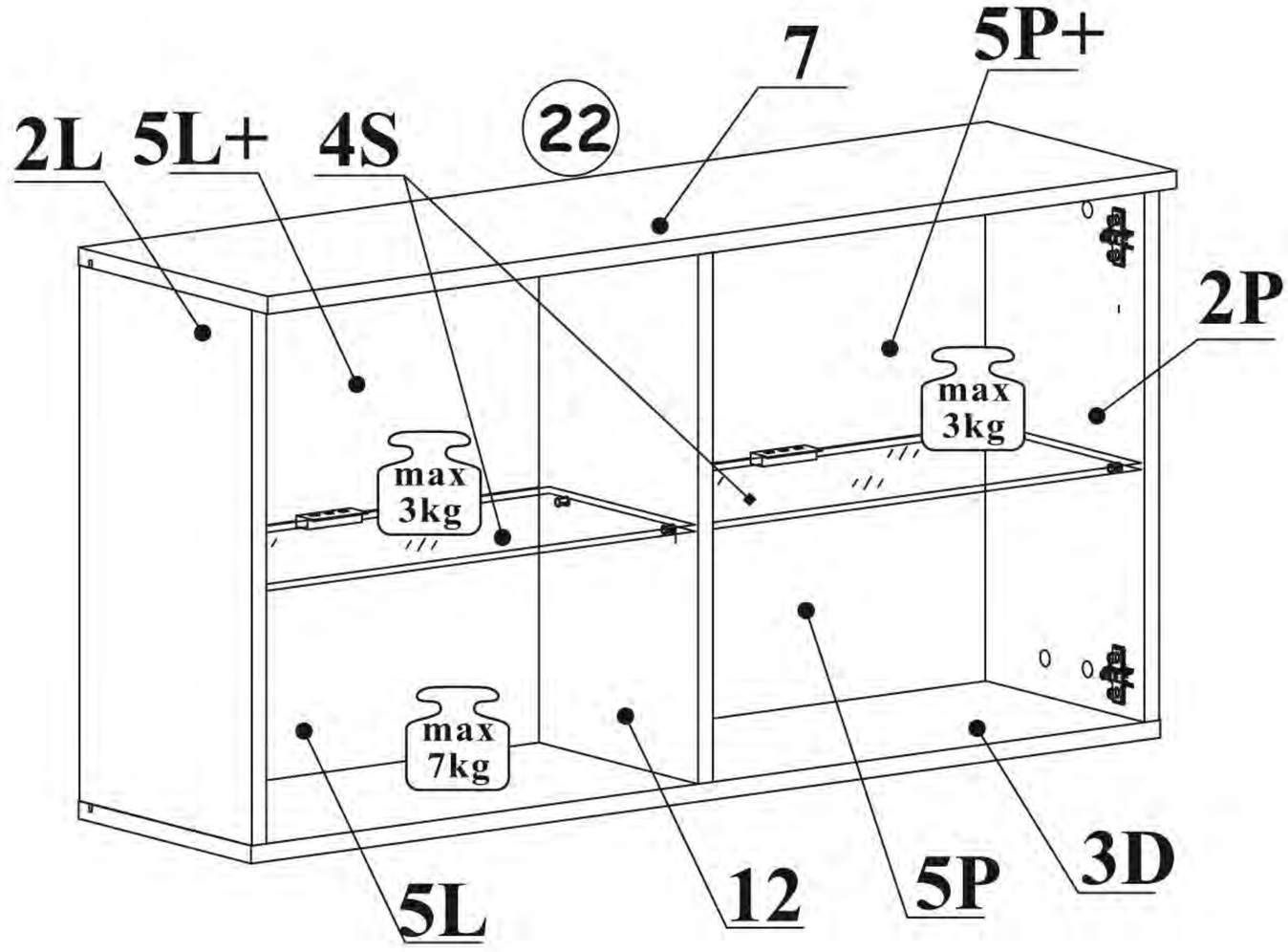

PVC

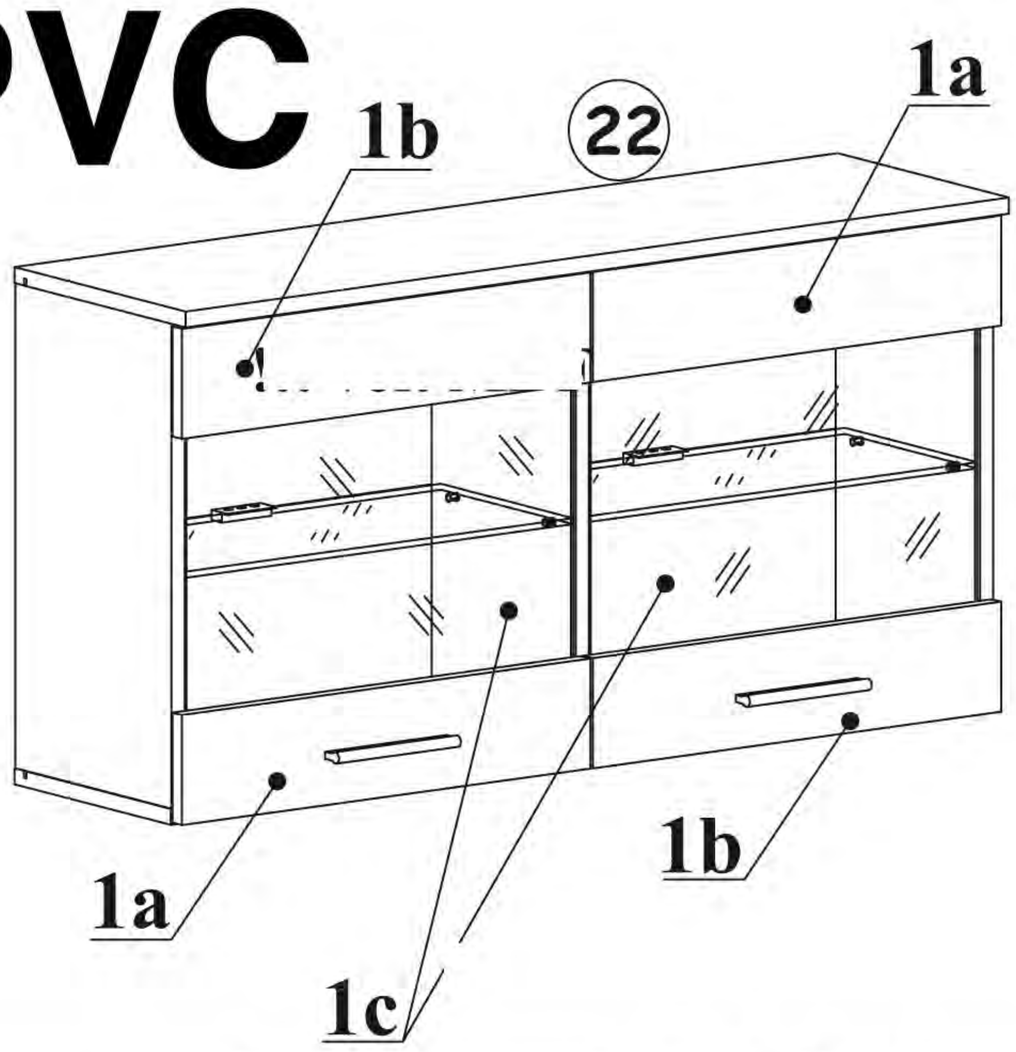

NO	Dim.		Col.-No	Qty
2L	485	260	4	1
2P	485	260	4	1
12	485	240	4	1
3D	1000	260	4	1
4S	474	220	4	2
5L+	489	260	4	1
5L	489	237	4	1
5P+	489	260	4	1
5P+	489	237	4	1
7	1000	285	4	1
1a	496	110	6	2
1b	496	110	6	2
1c	470	326	6	2

BASIC

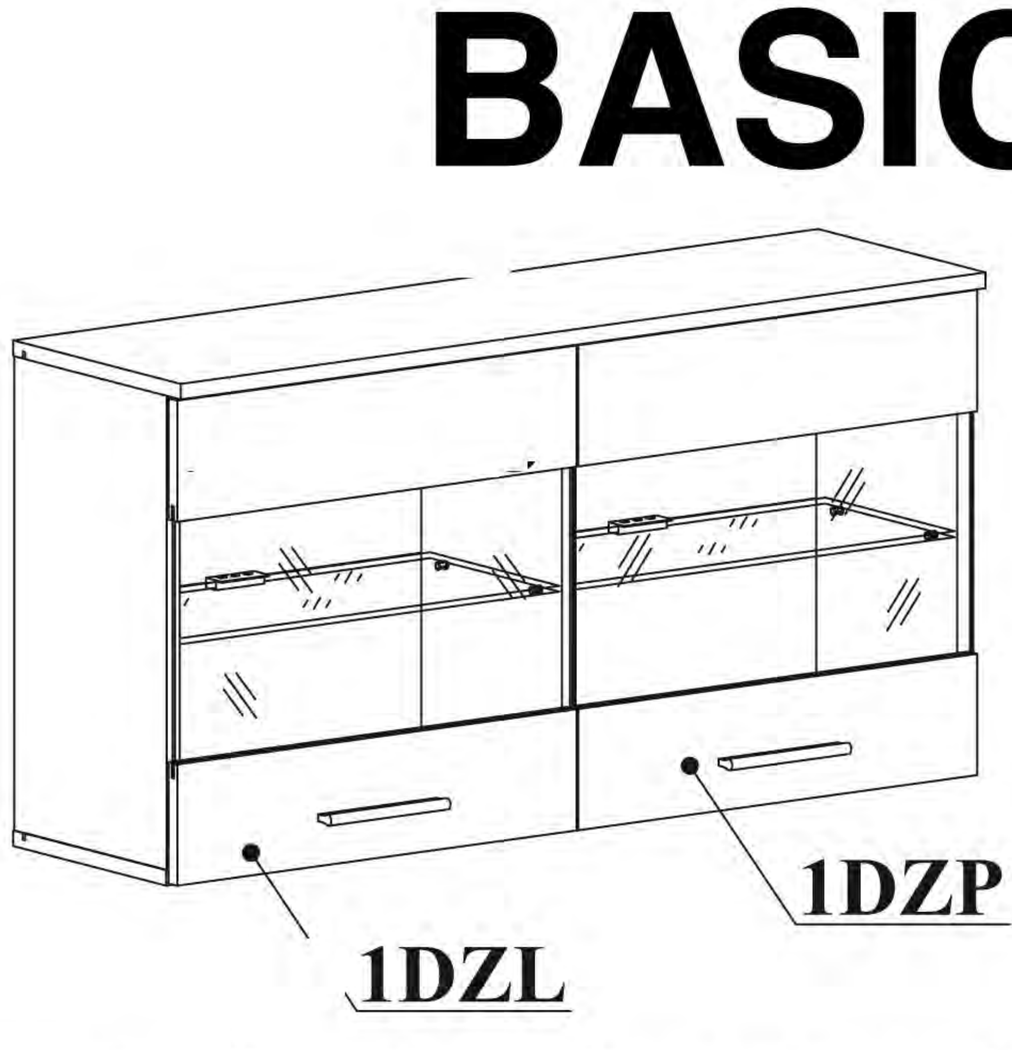

NO	Dim.		Col.-No	Qty
2L	485	260	4	1
2P	485	260	4	1
12	485	240	4	1
3D	1000	260	4	1
4S	474	220	4	2
5L+	489	260	4	1
5L	489	237	4	1
5P+	489	260	4	1
5P+	489	237	4	1
7	1000	285	4	1
1DZP/L	496	496	6	2

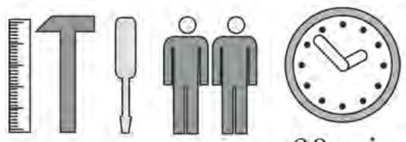

90 min

TYP 22 LOGO 3

A1 X12 ø8x36	B4 X12	B5 X12 ø15x12	G5 X12	G20 X8	Z2 X4 Ø5 COLI - 6	D10 X8 USØ3,5x13	UP6 X4 UPØ4x30		
KR2 X3	ZXL X2	ZXP X1	G2 X1	E21 X4 Ø35 H=0	E2 X4 H=0	KL X2 L-128mm.	S1 X6		
G16 X5	UP13 X5 UPØ3x16	LED X1 X2	P2 X12 PVC COLI - 6	UP13 X12 PVC UPØ3x16 COLI - 6					

0 mm 10 20 30 40 50 60

1

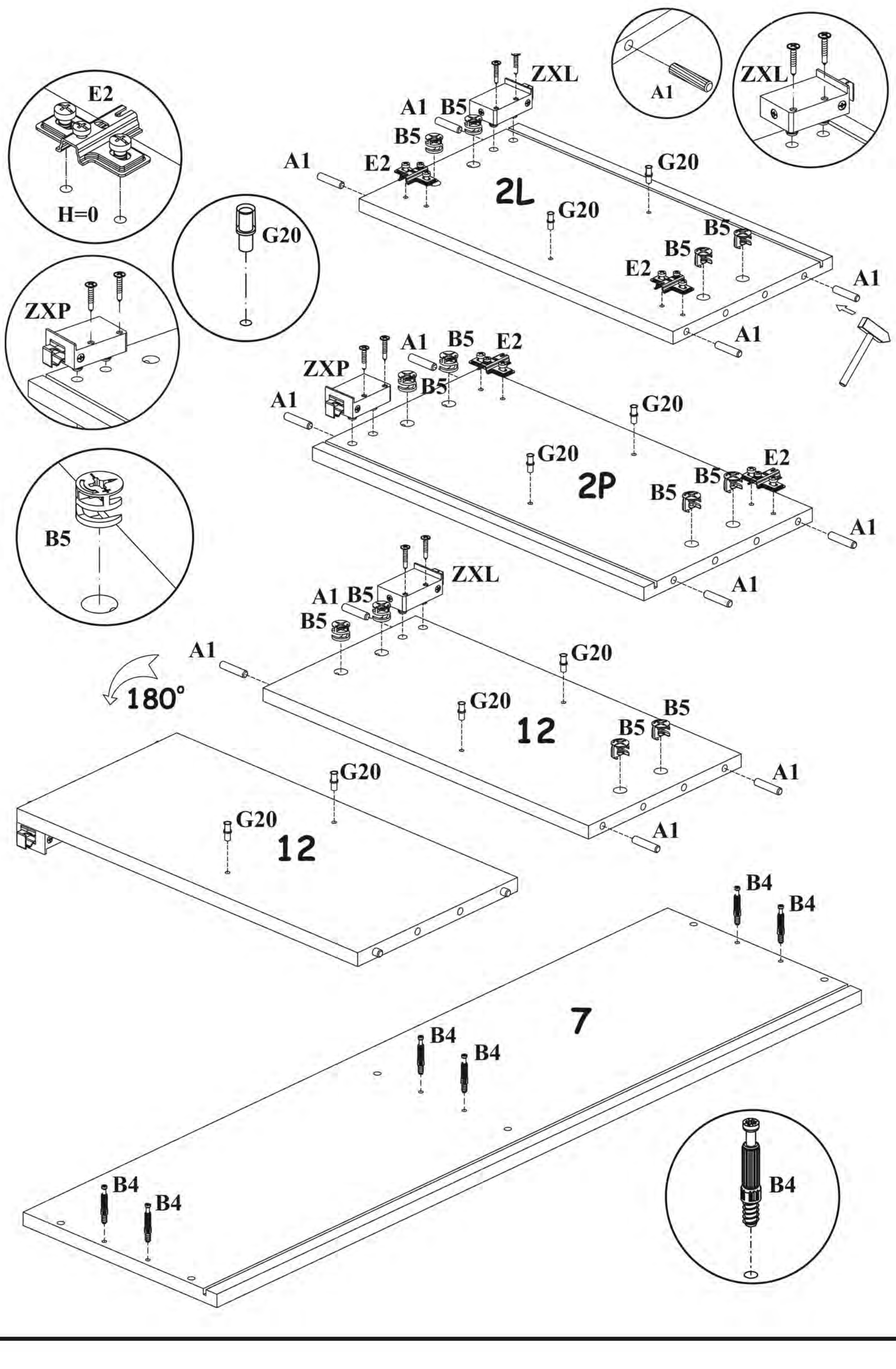

TYP 22 LOGO 3

2

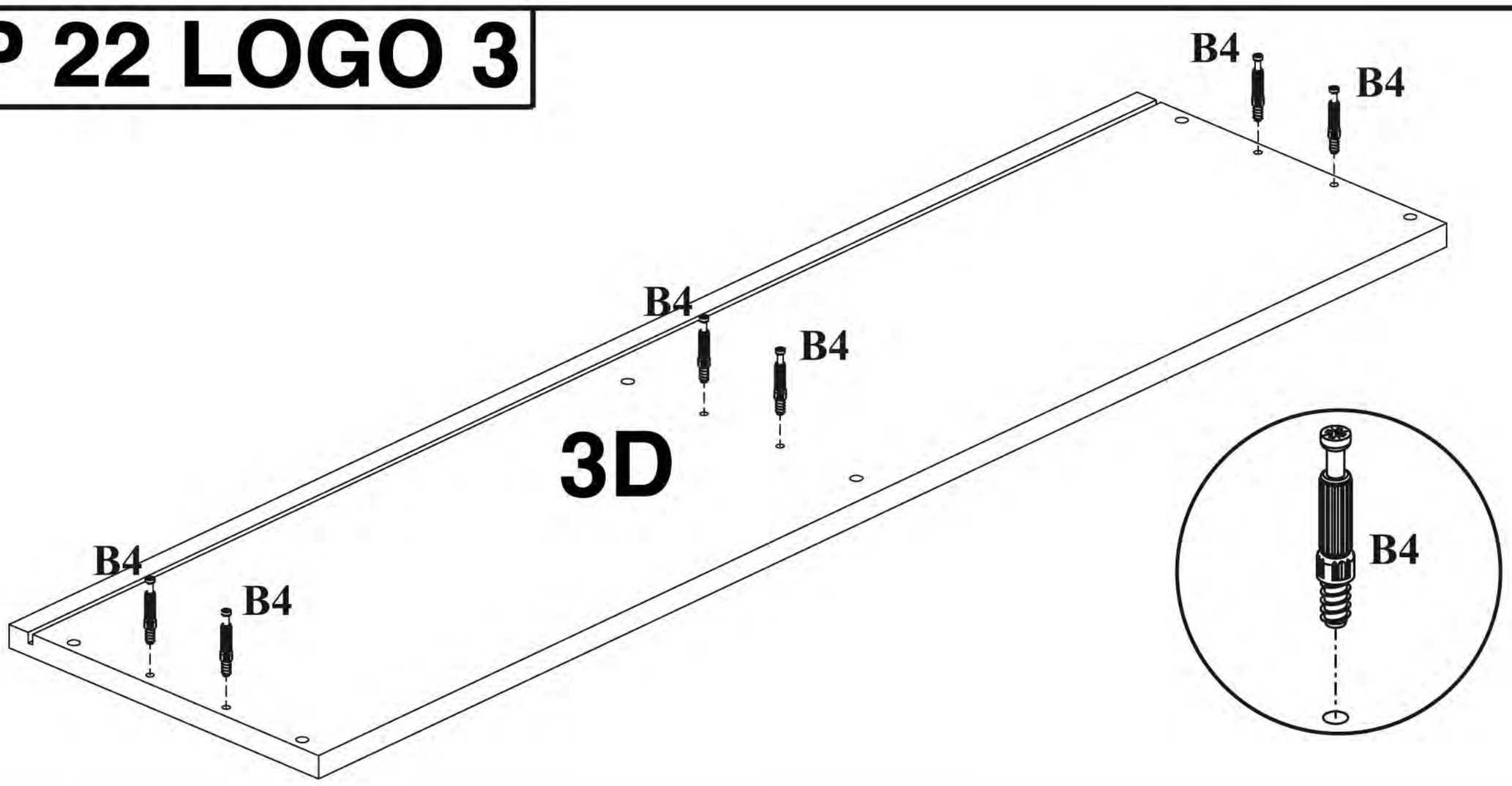

3 PVC

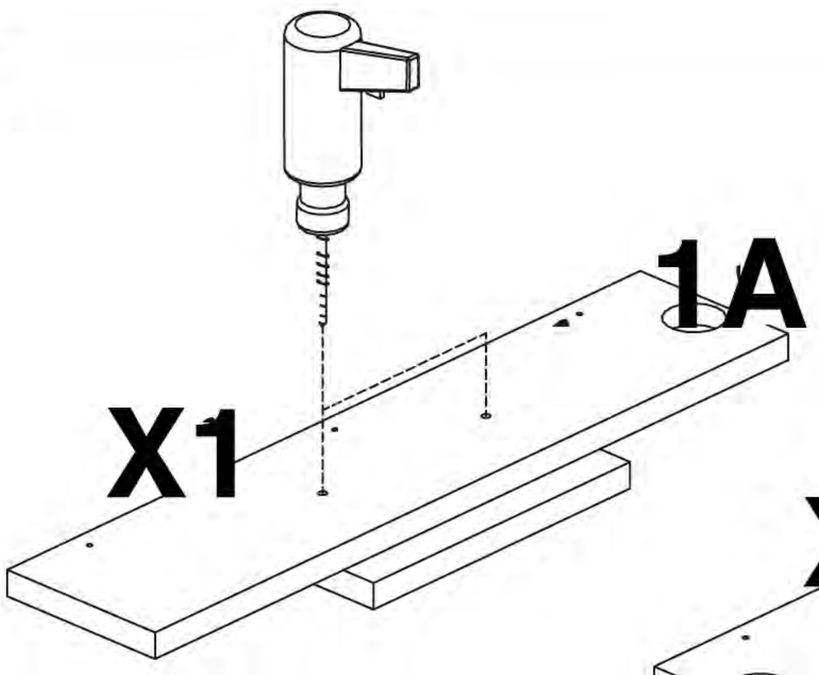

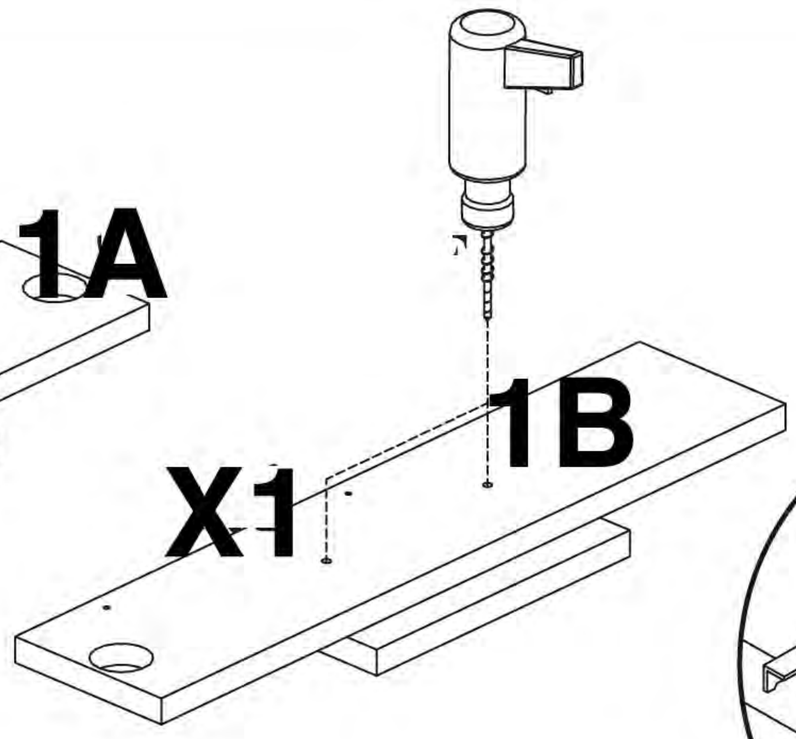

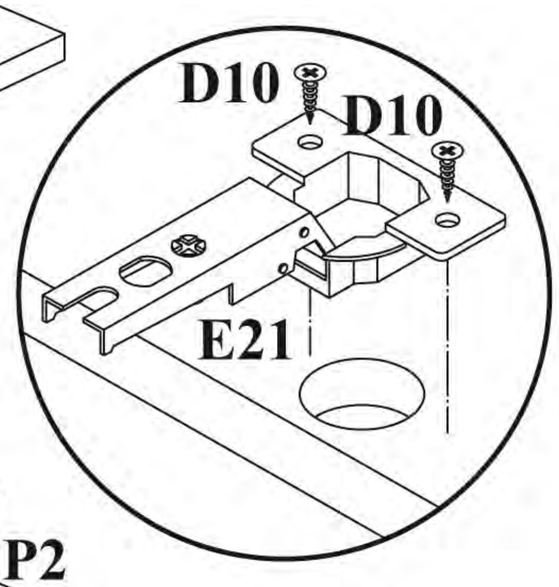

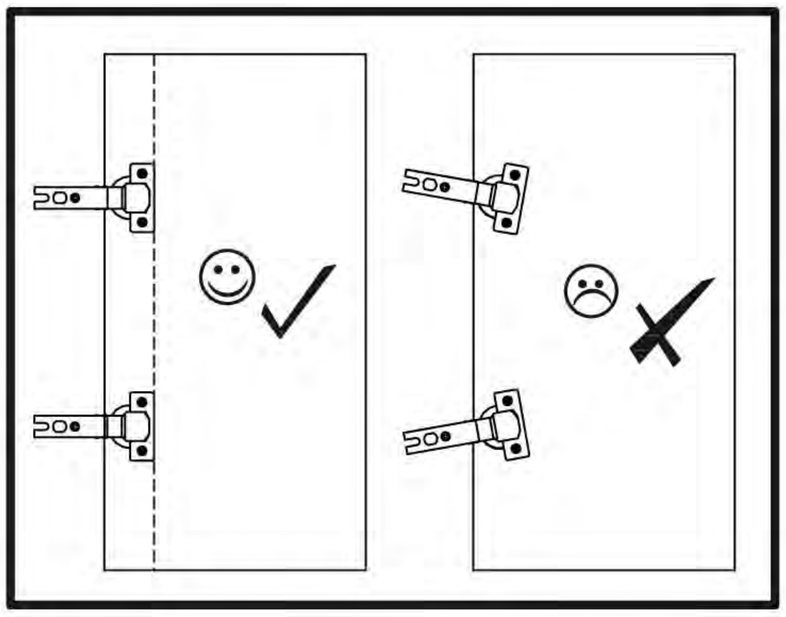

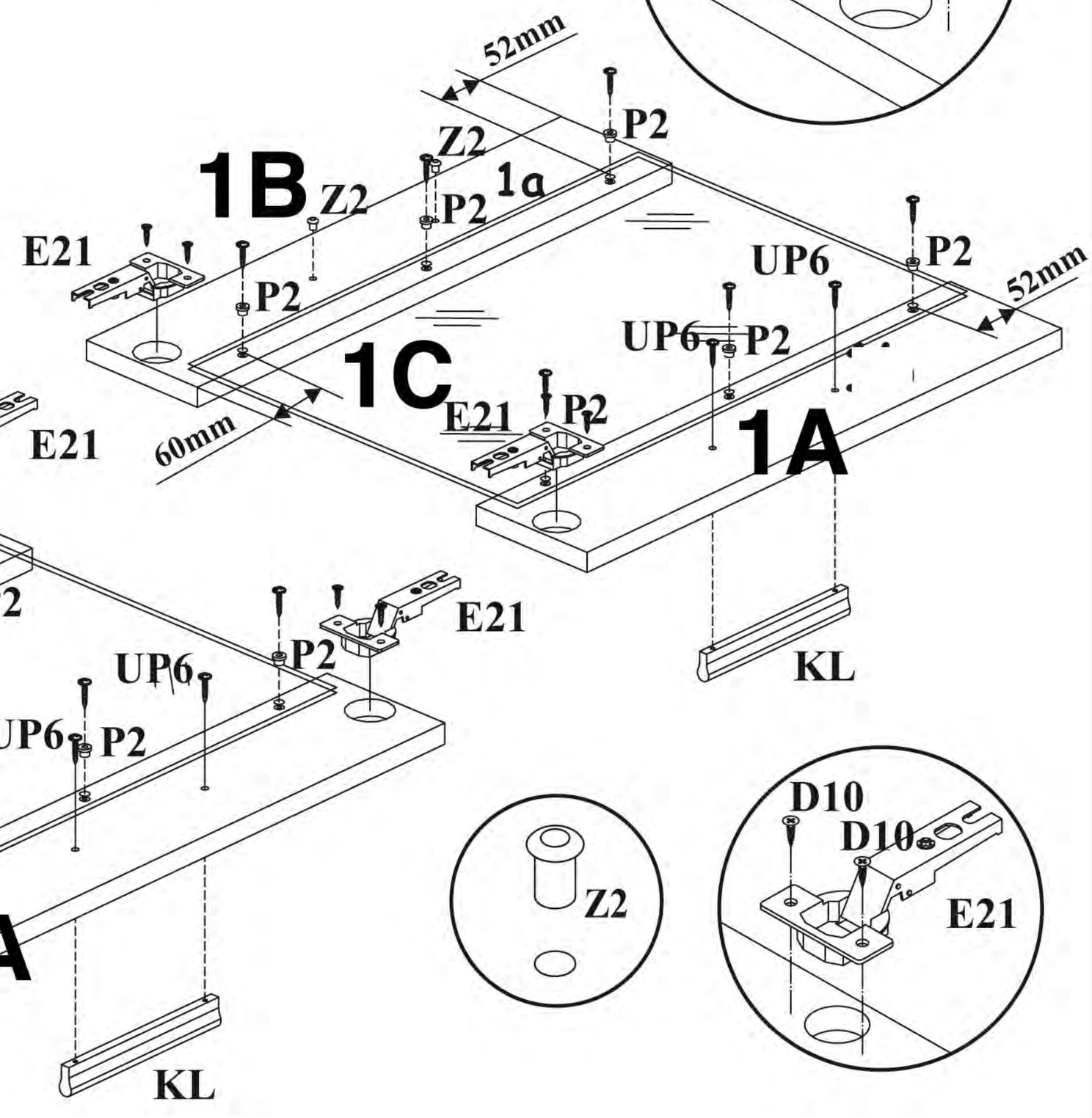

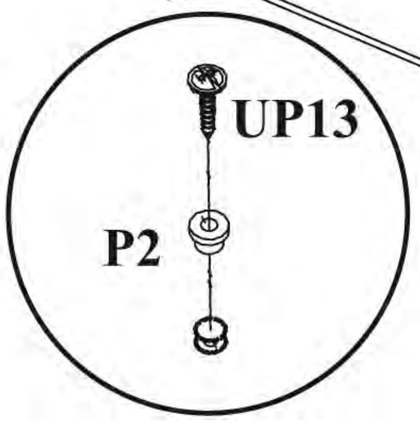

TYP 22 LOGO 3

3 BASIC

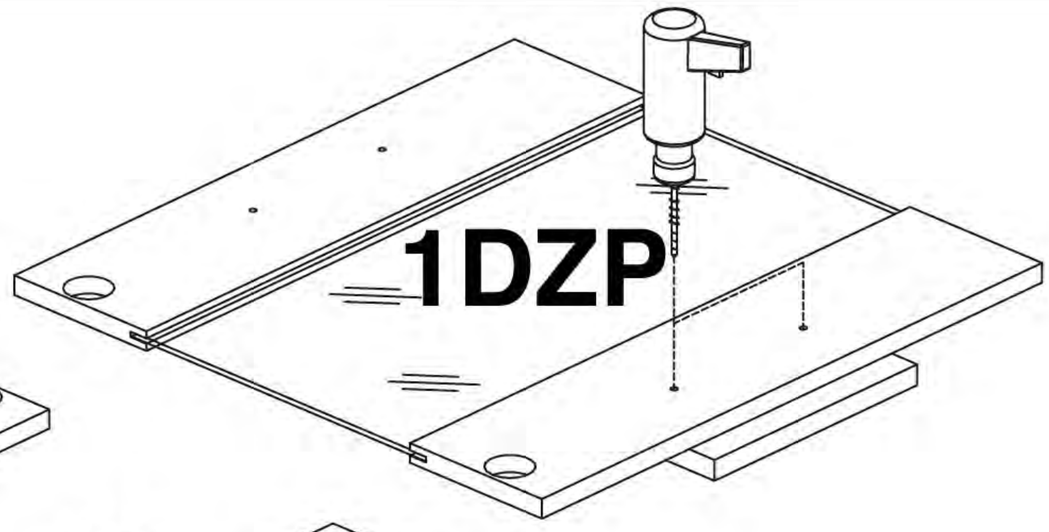

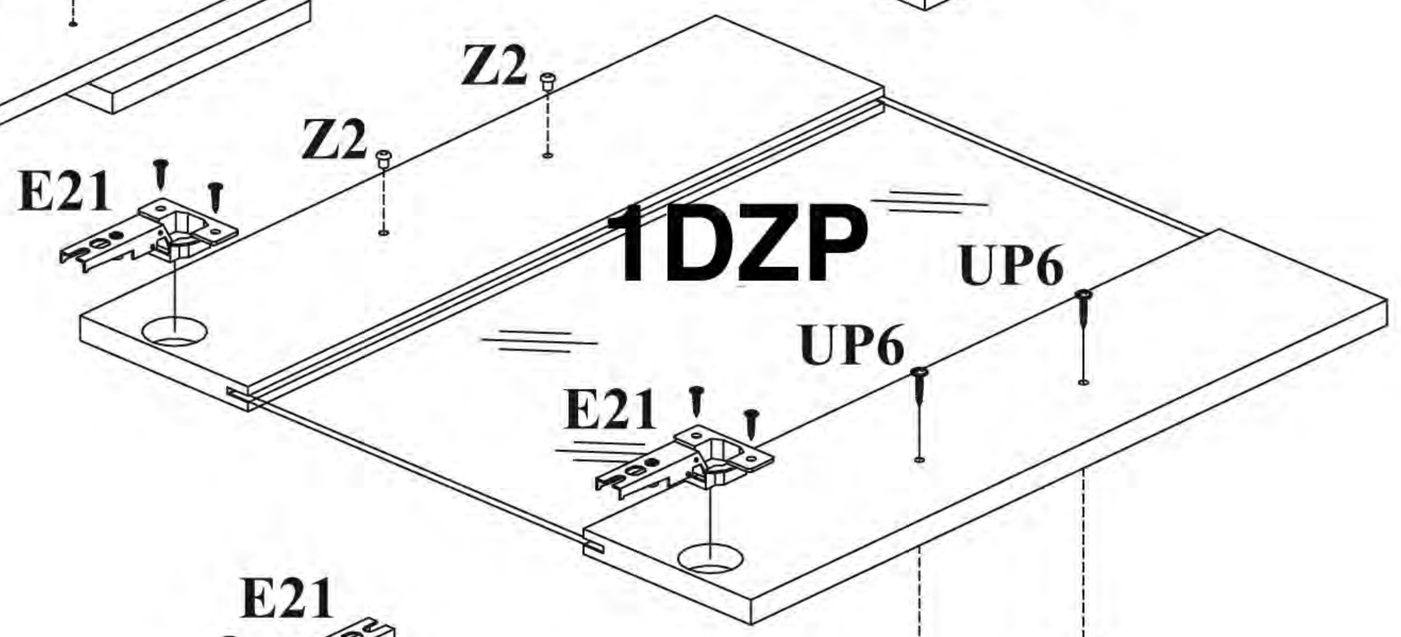

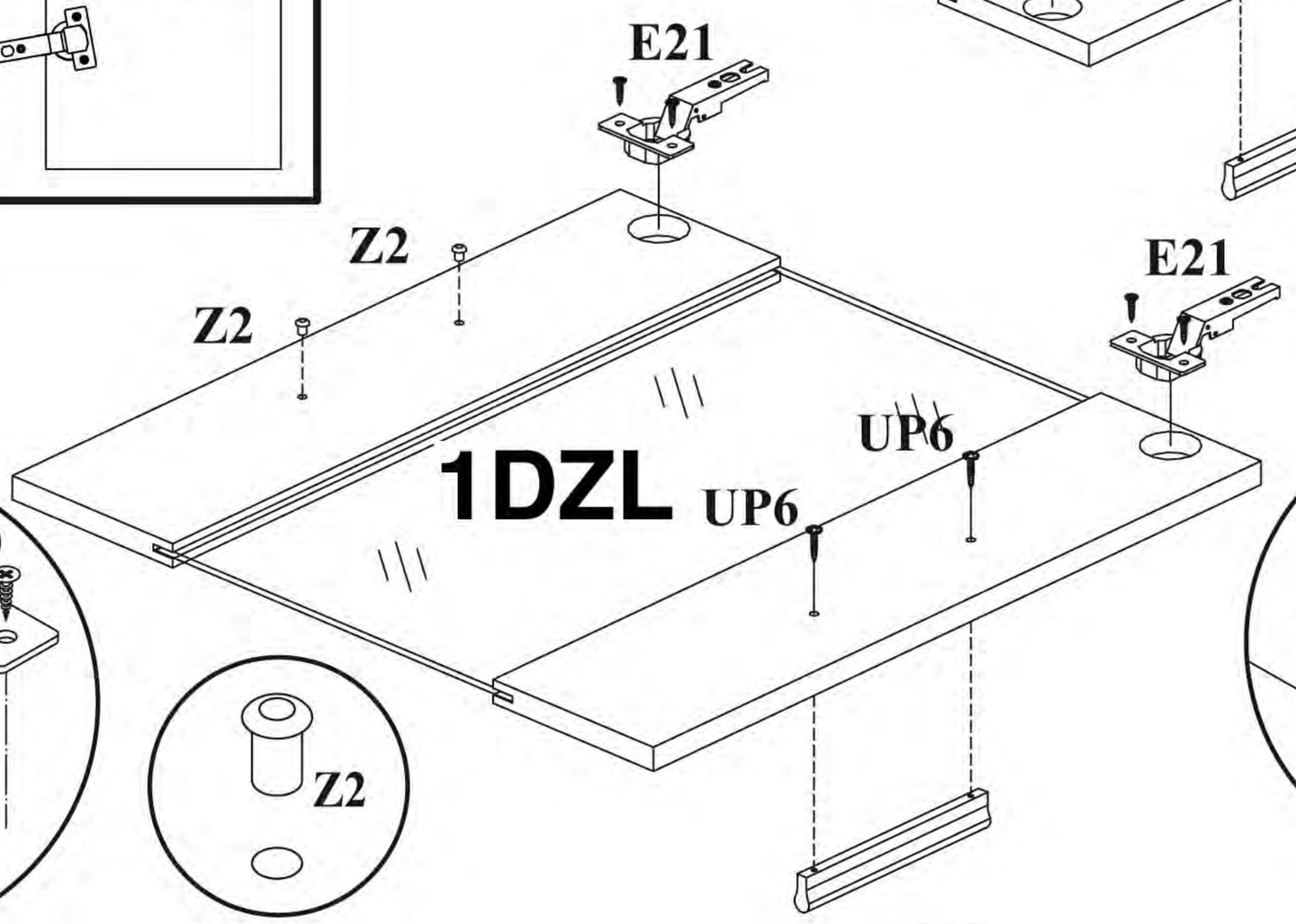

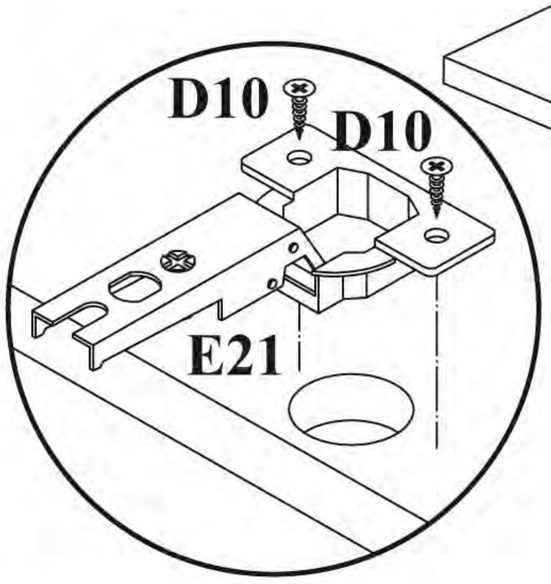

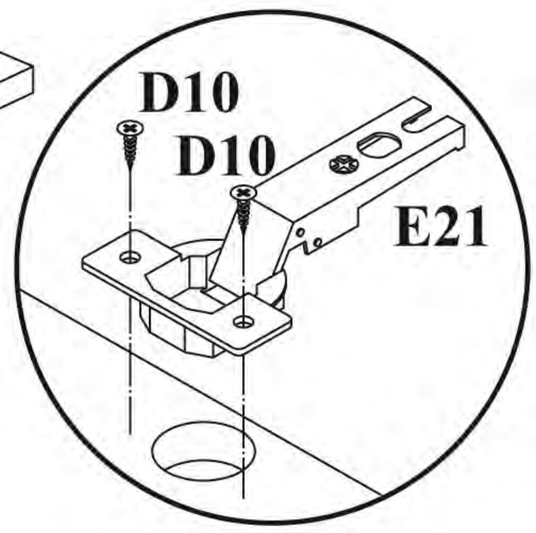

4

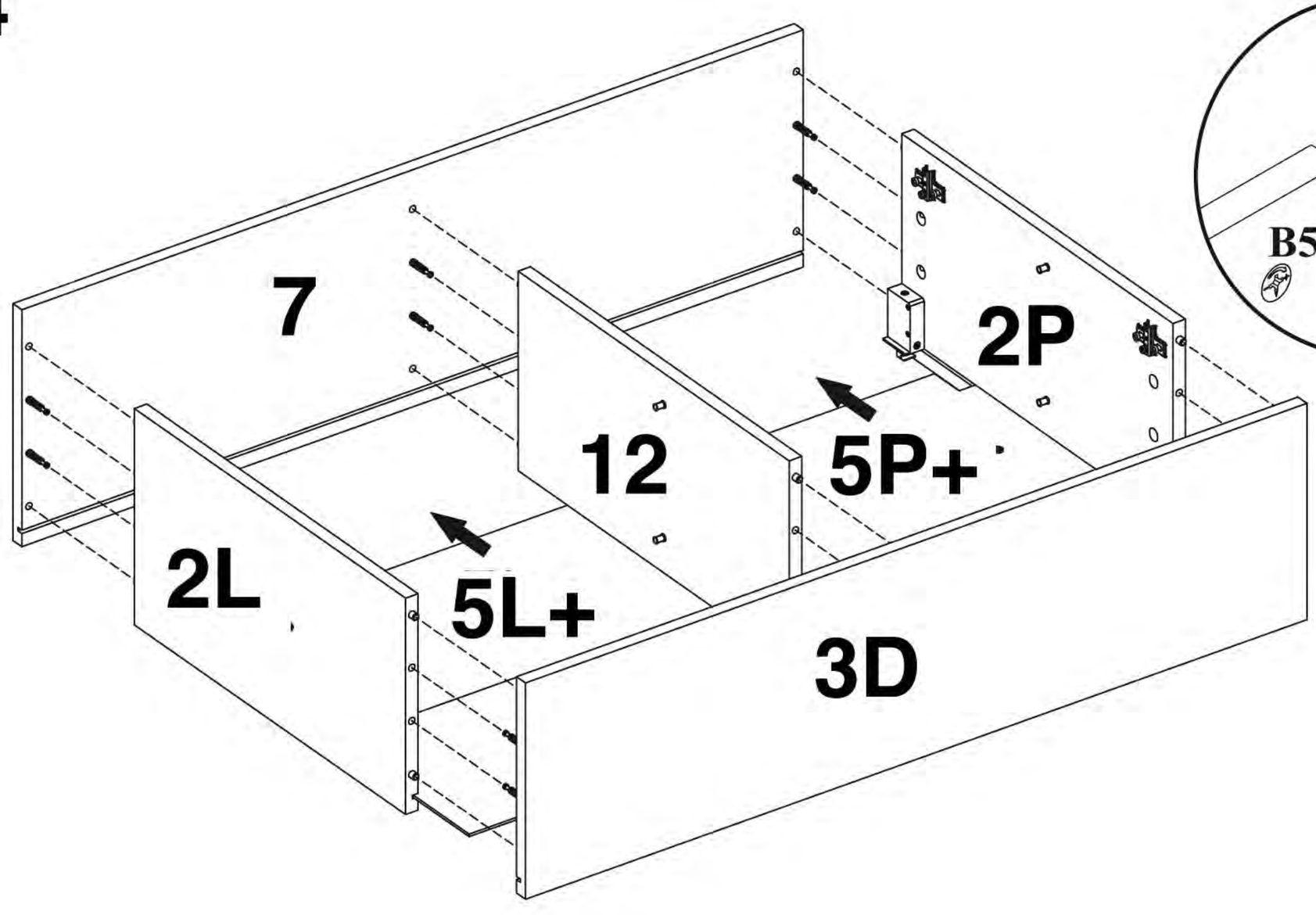

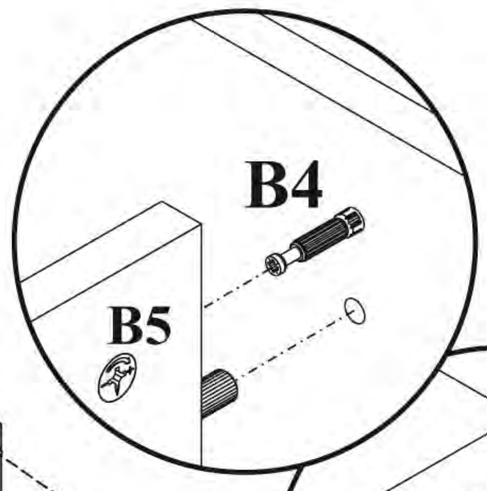

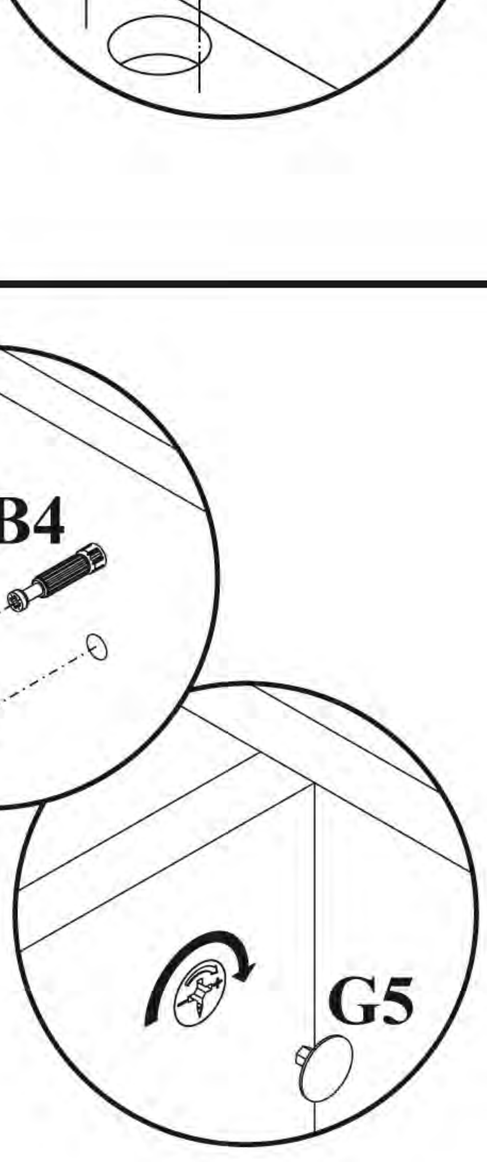

TYP 22 LOGO 3

5

X=Y 90°

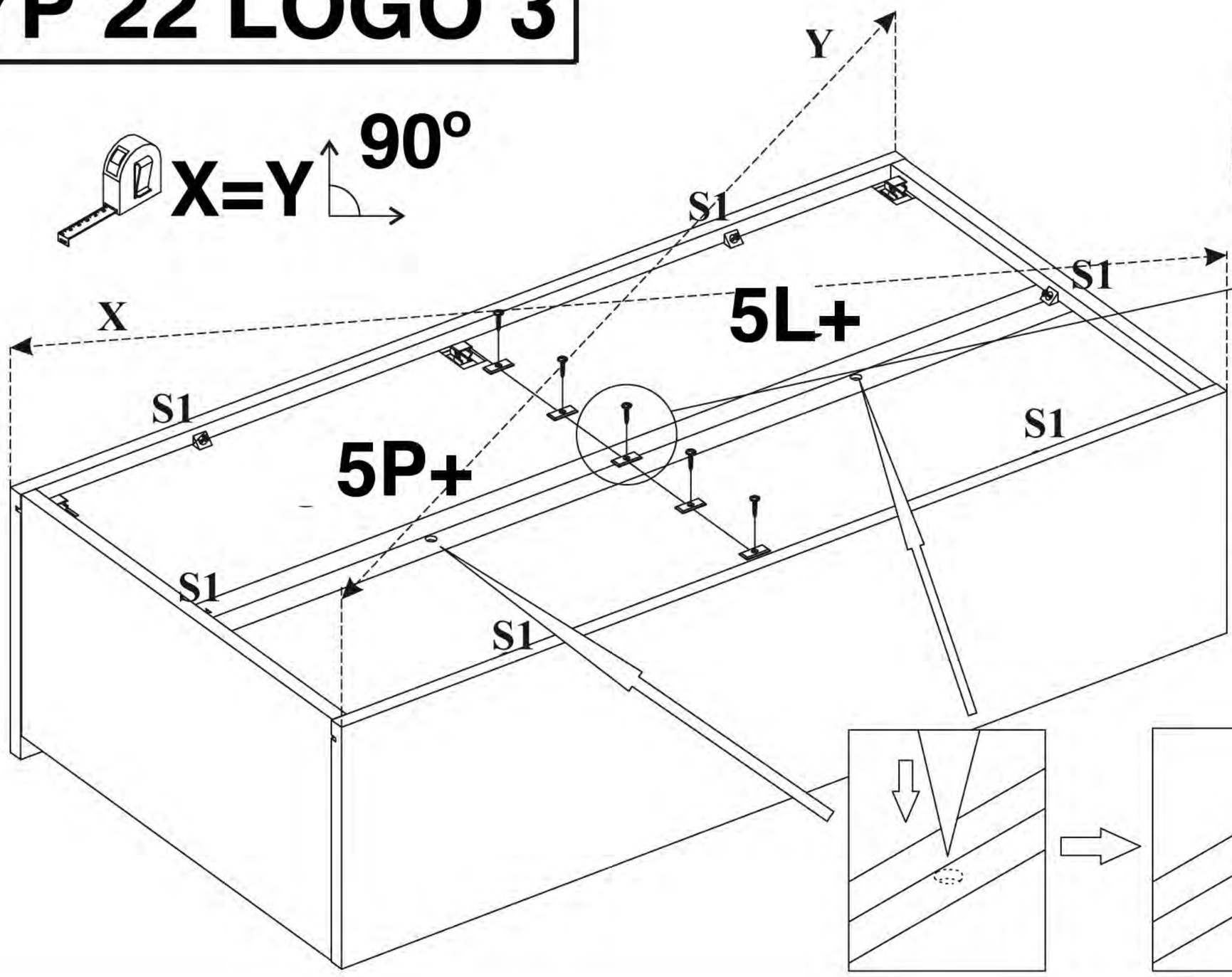

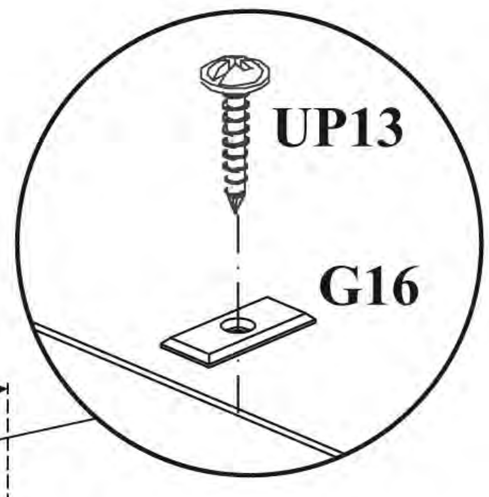

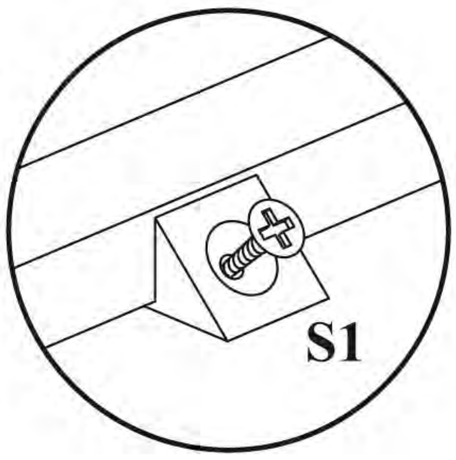

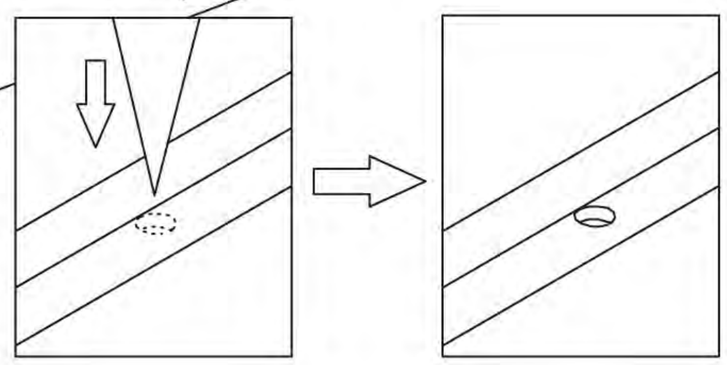

6

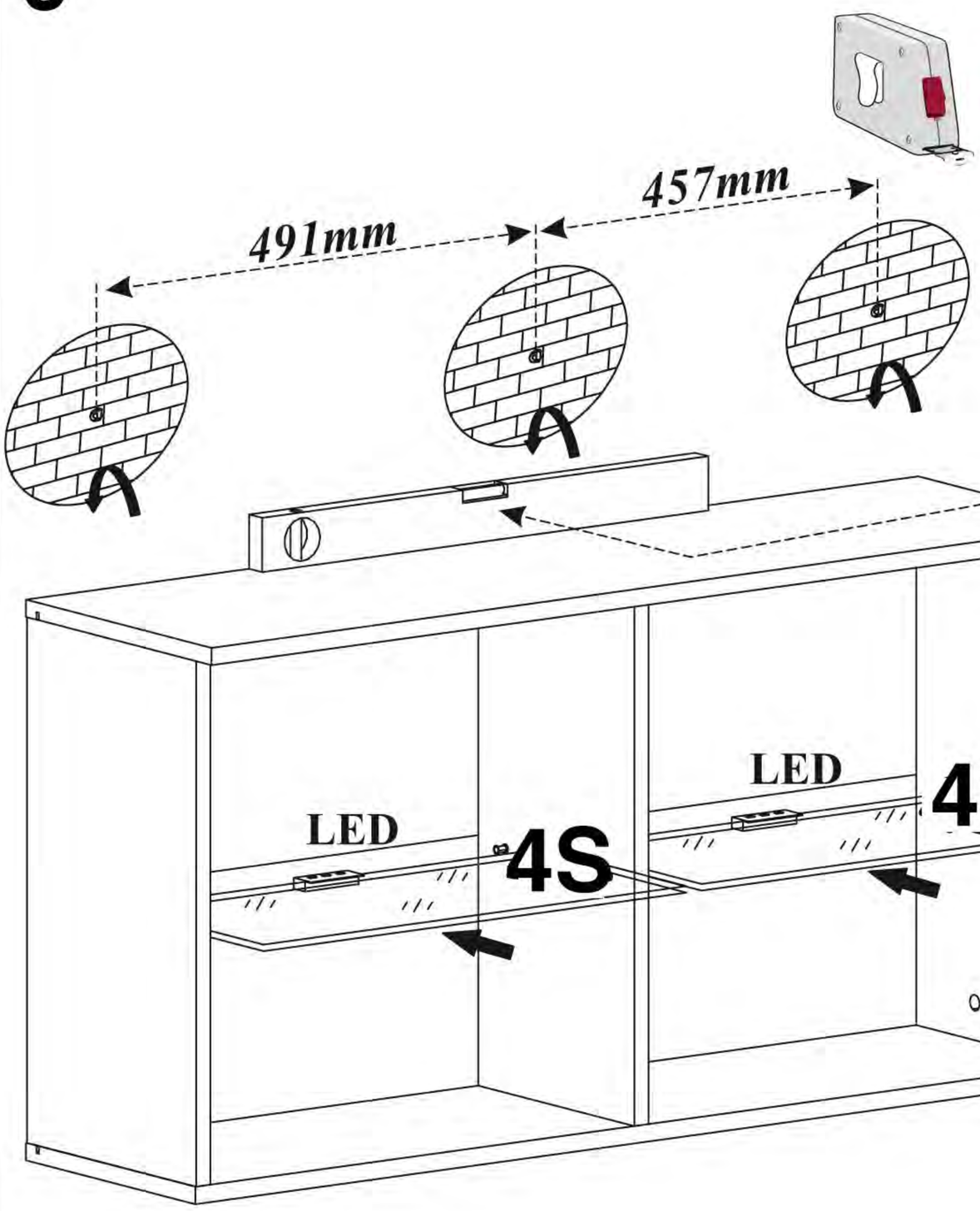

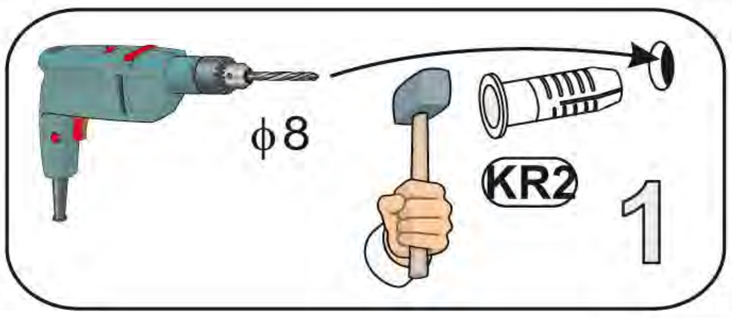

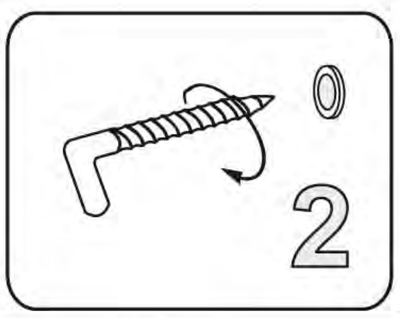

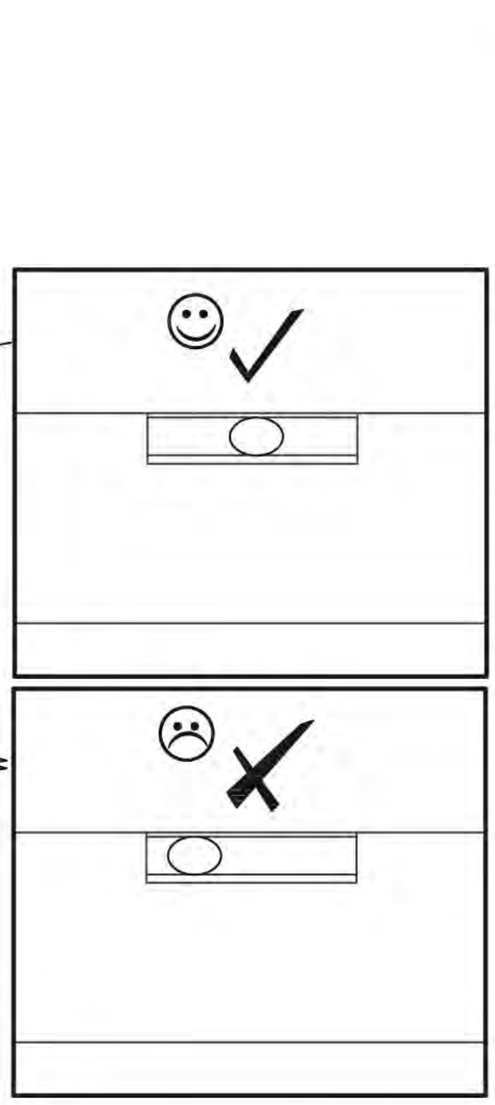

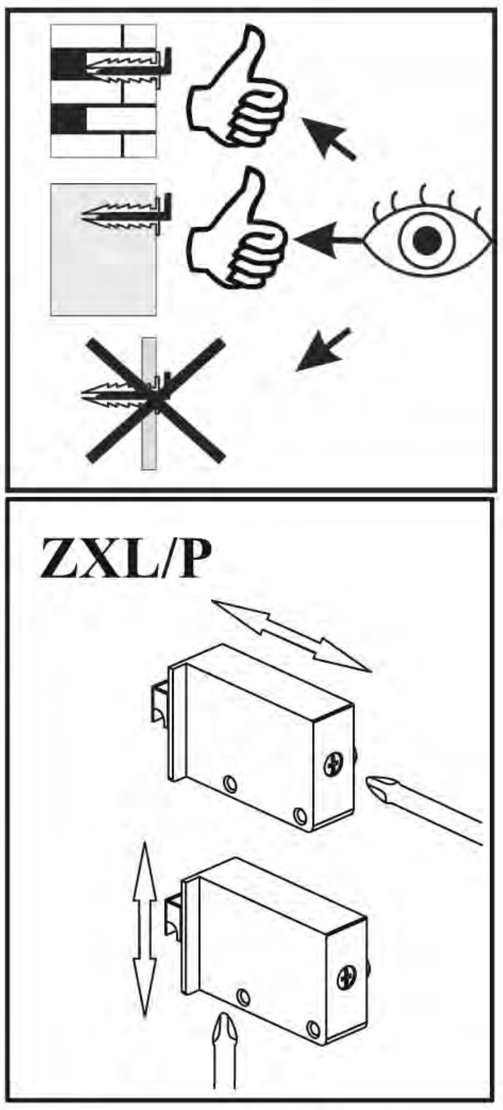

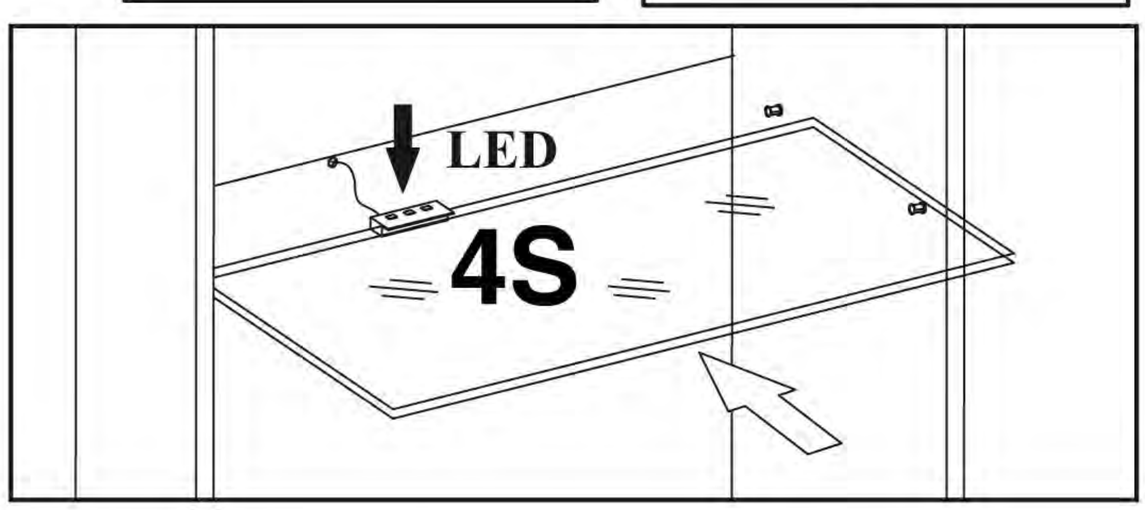

TYP 22 LOGO 3

8 PVC

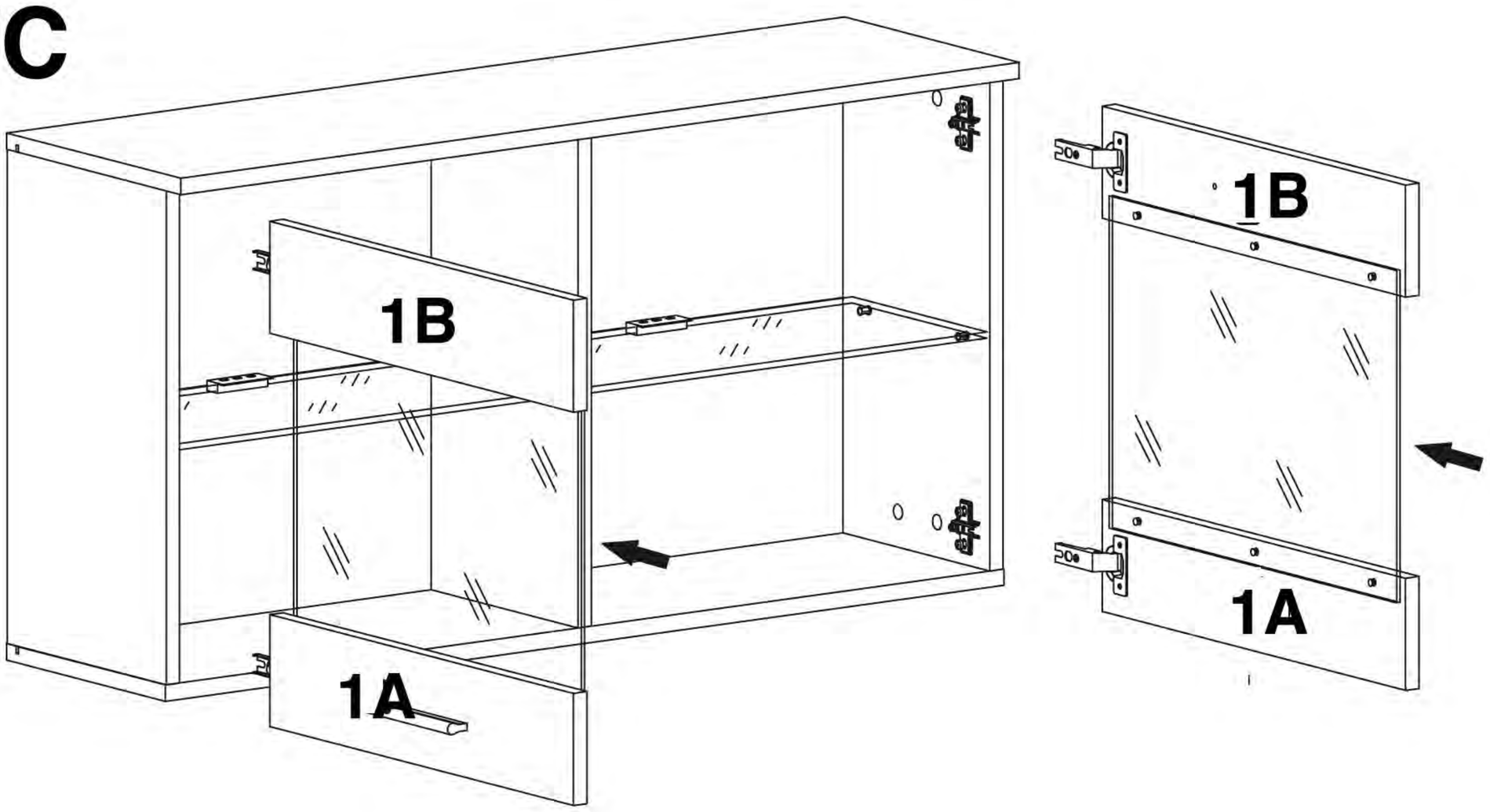

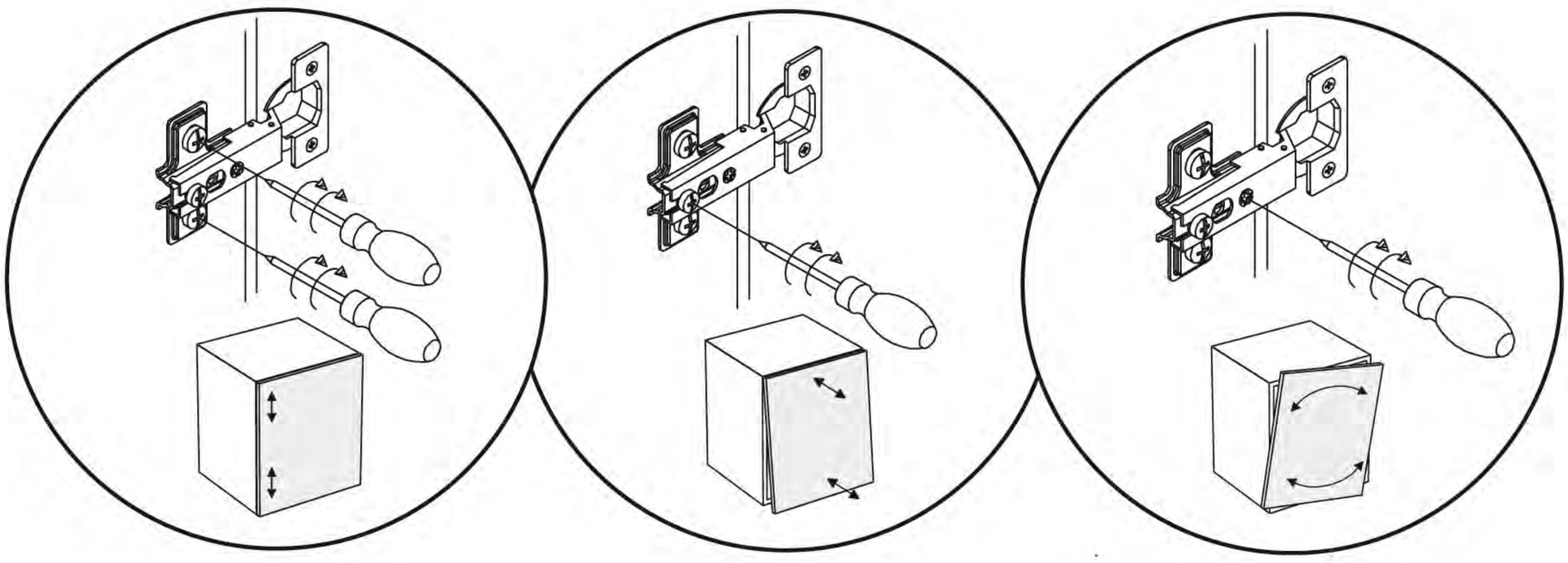

8 BASIC

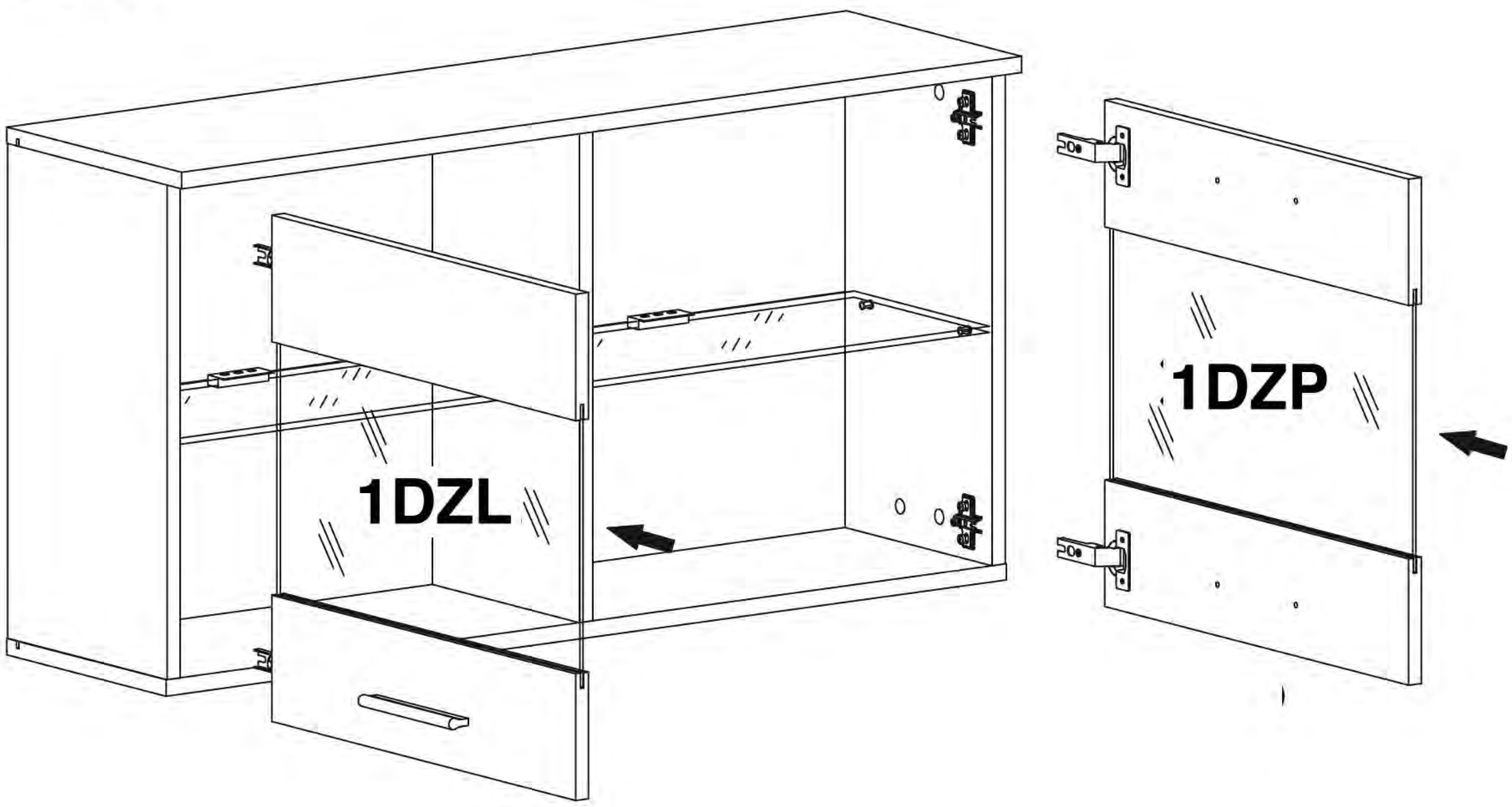

TYP80

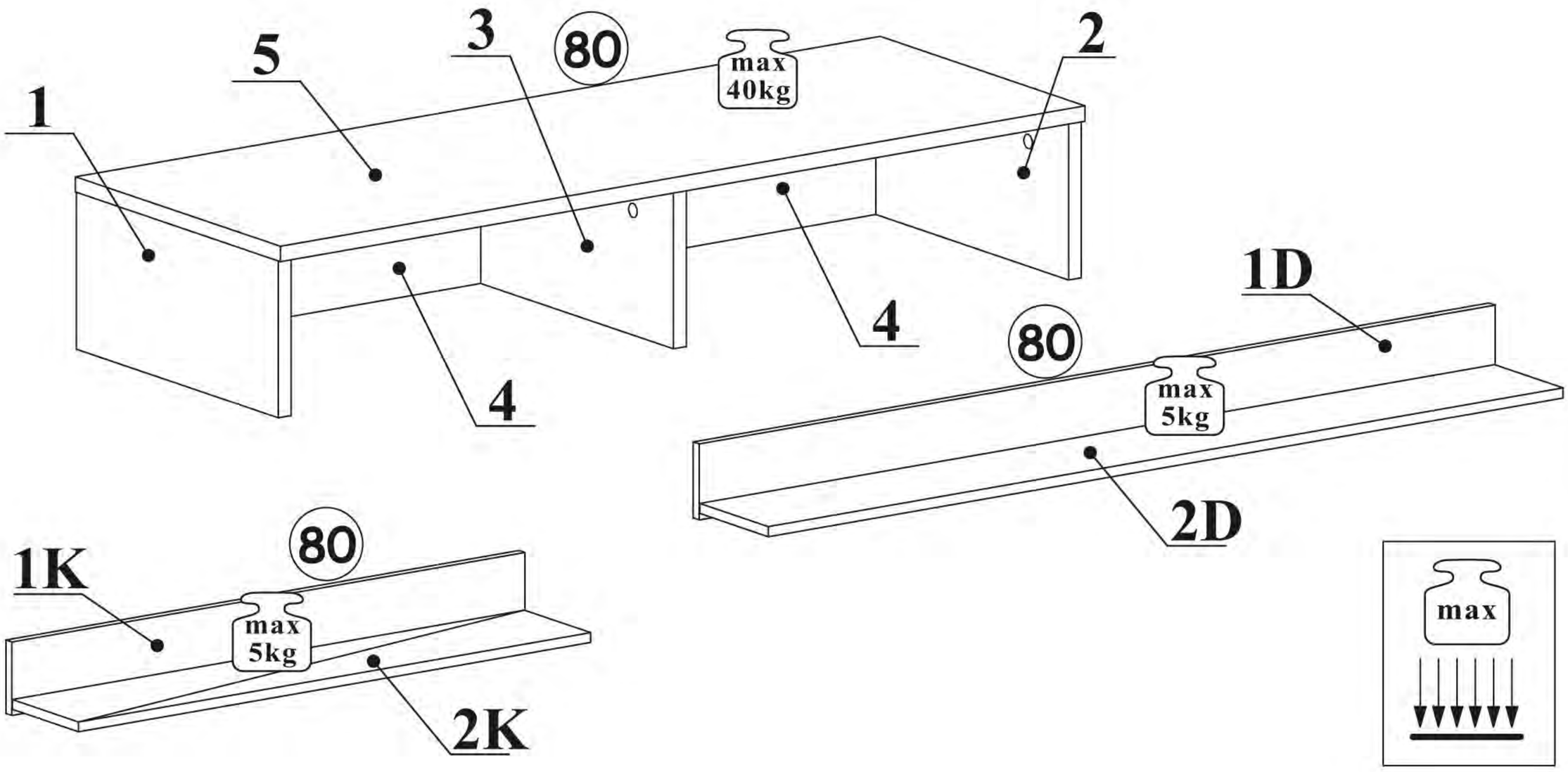

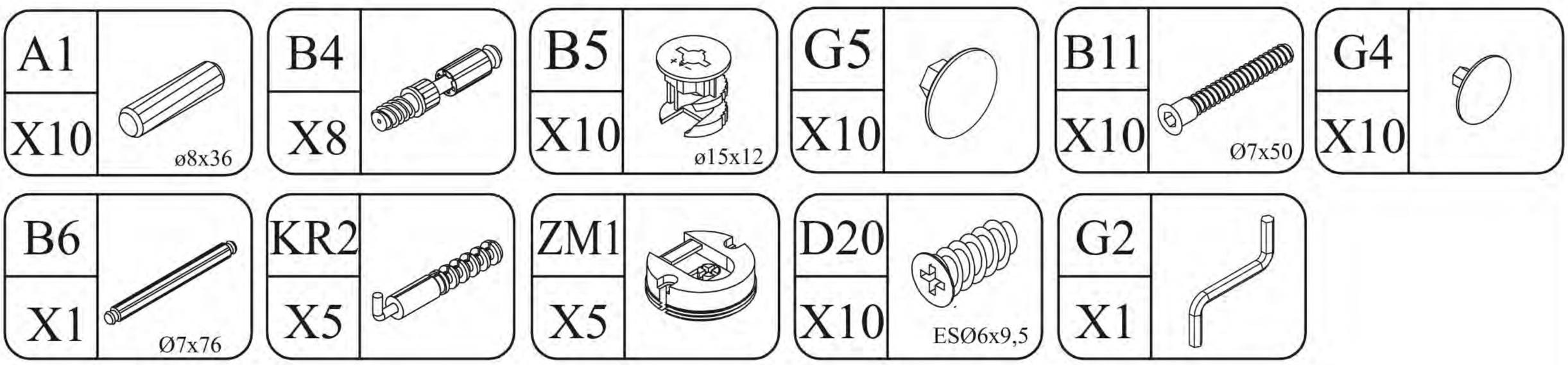

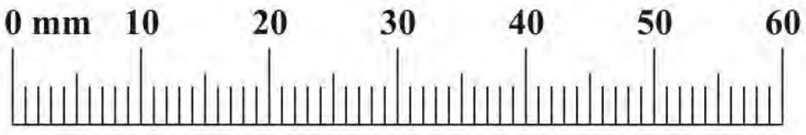

NO	Dim.		Col.-No	Qty
1K	1000	120	1	1
2K	998	180	1	1
1D	1500	120	1	1
2D	1498	180	1	1
1	164	350	1	1
2	164	350	1	1
3	164	350	1	1
4	475	80	1	2
5	1000	355	1	1

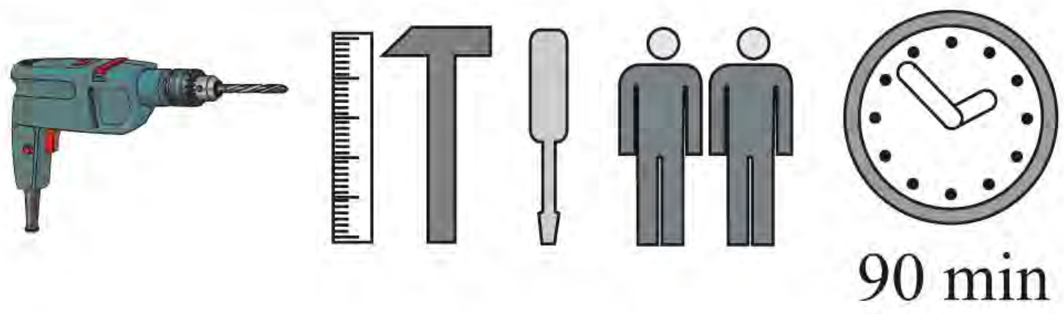

TYP 80 LOGO 3

1

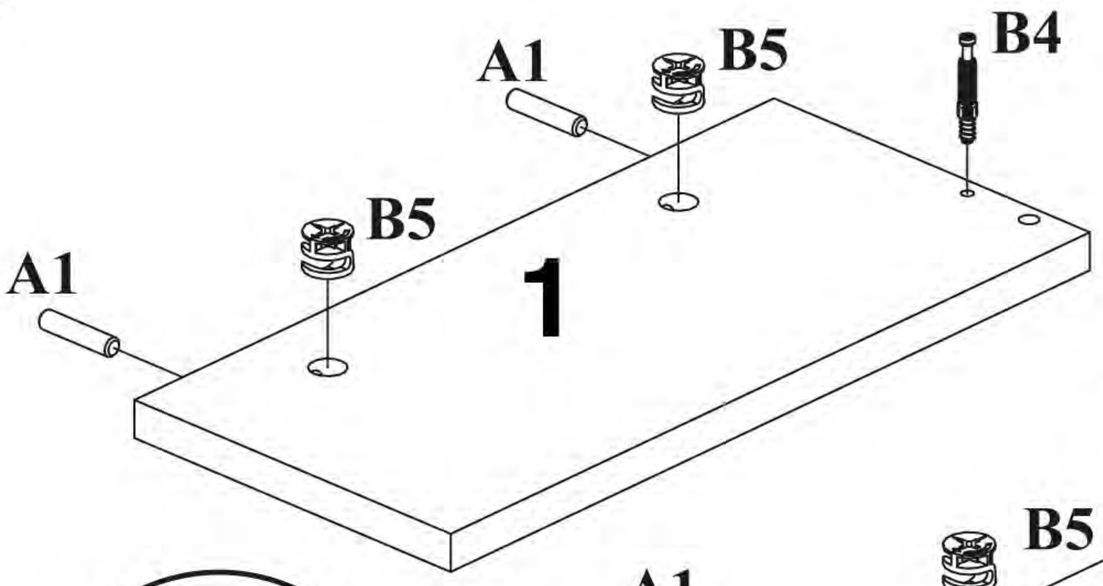

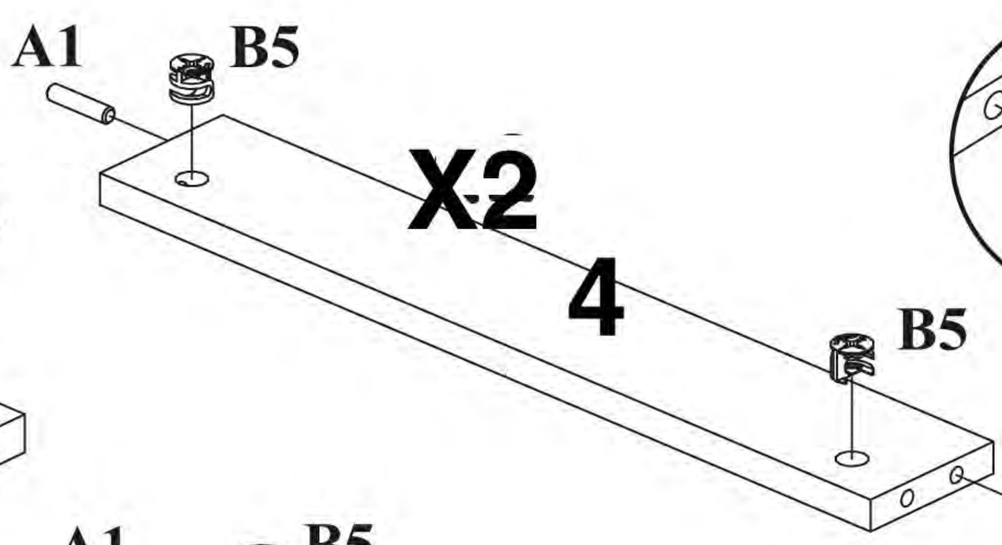

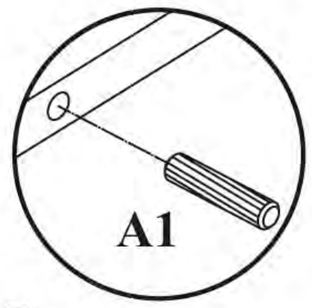

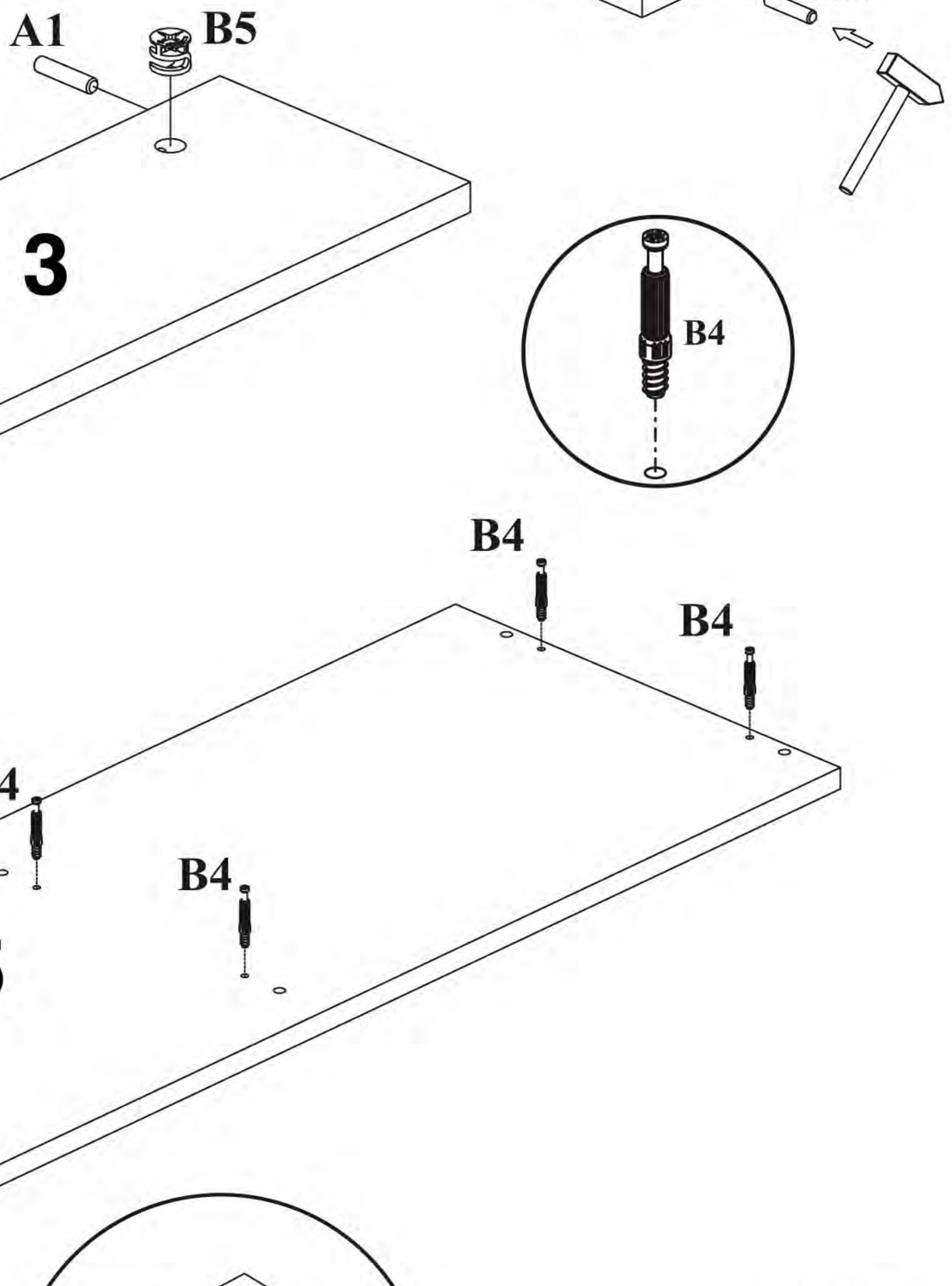

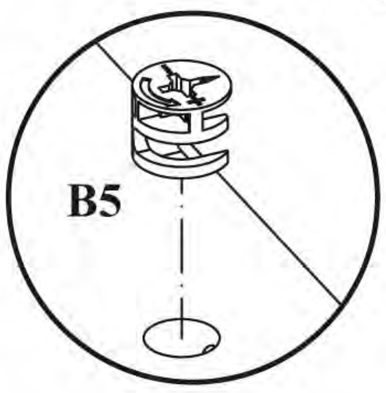

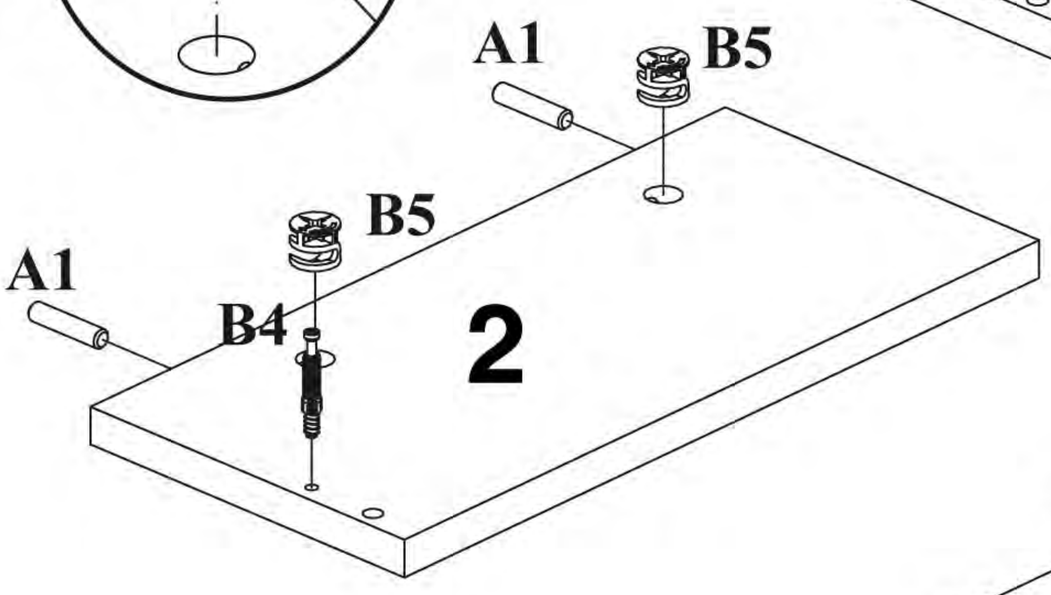

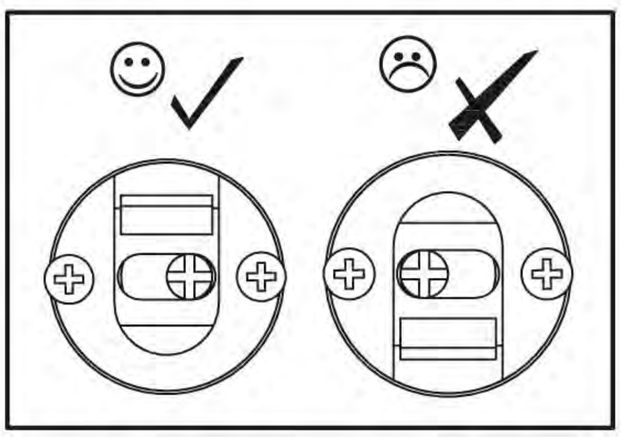

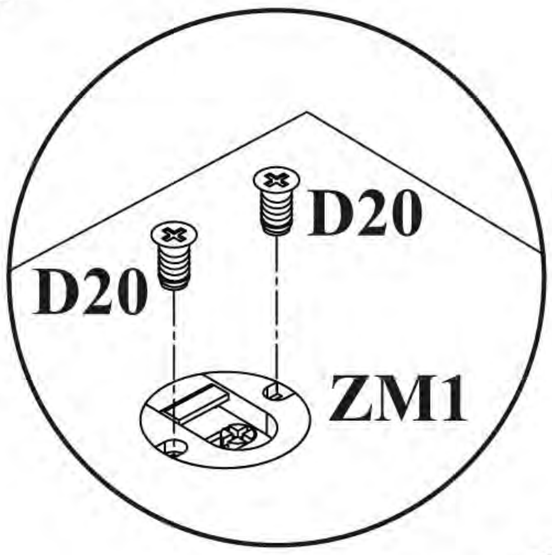

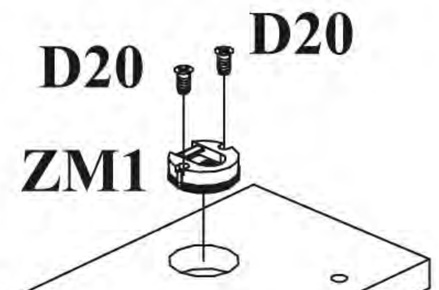

TYP 80 LOGO 3

2

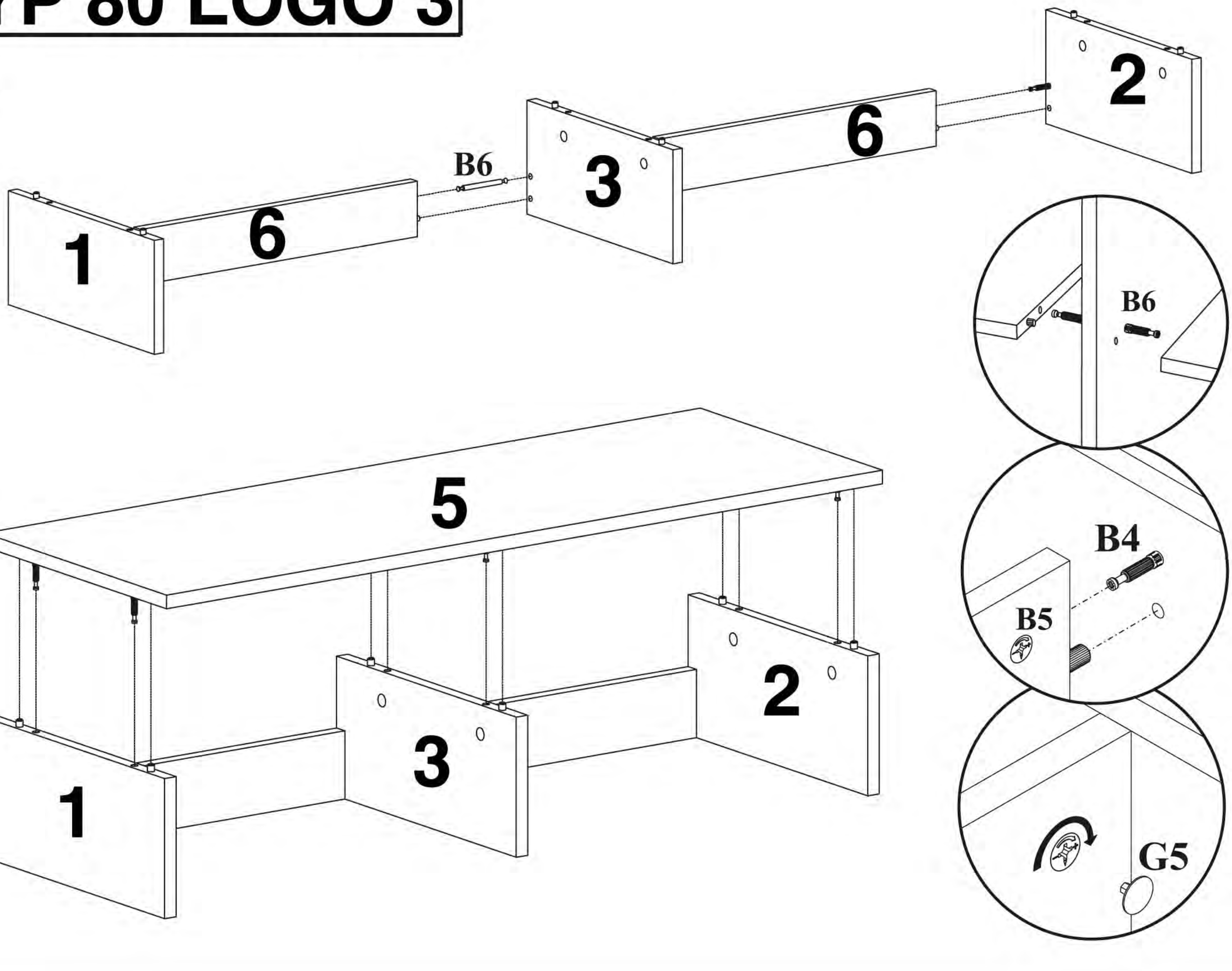

3

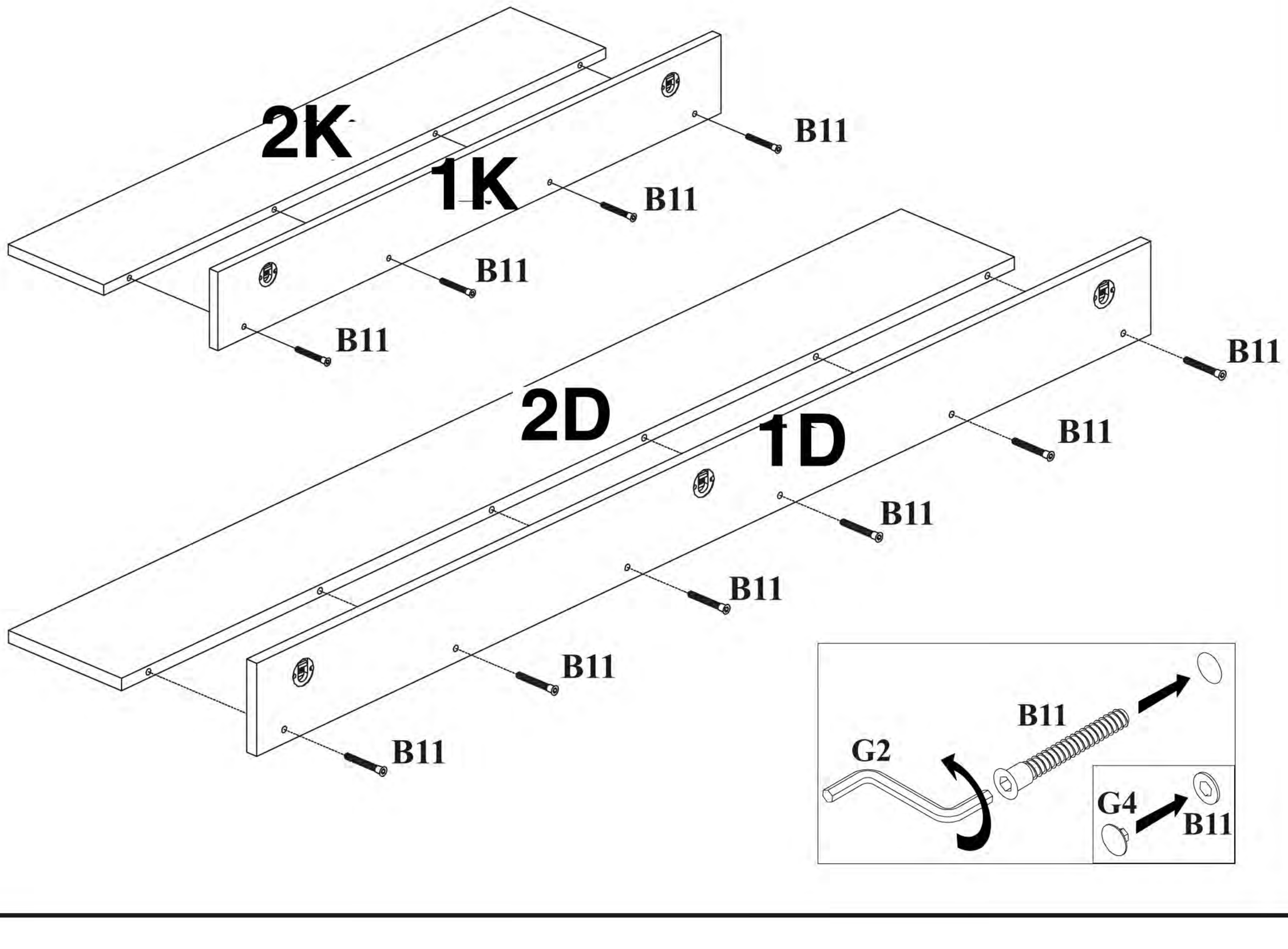

TYP 80 LOGO 3
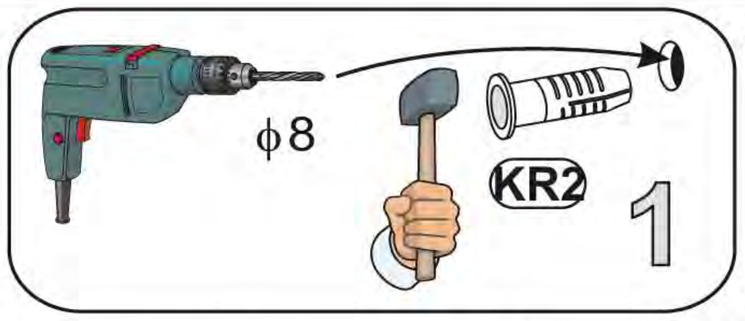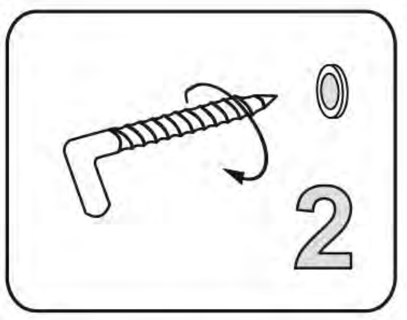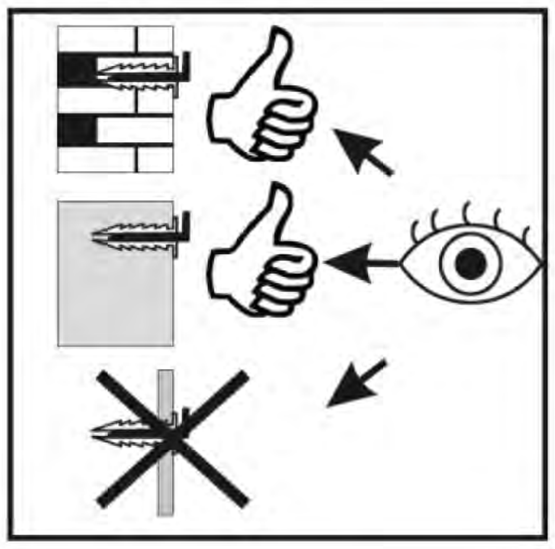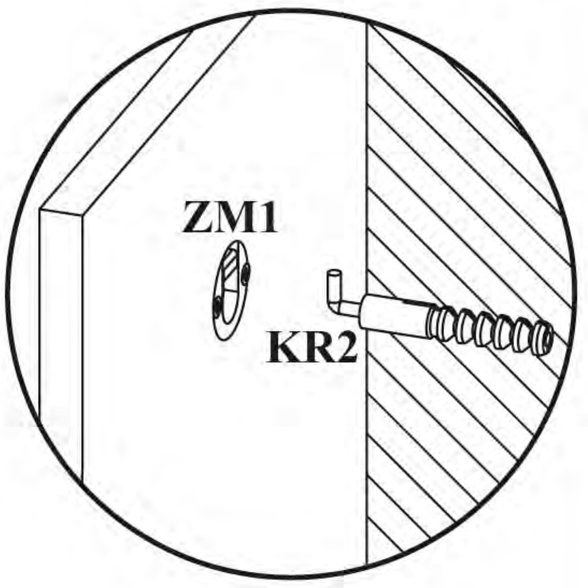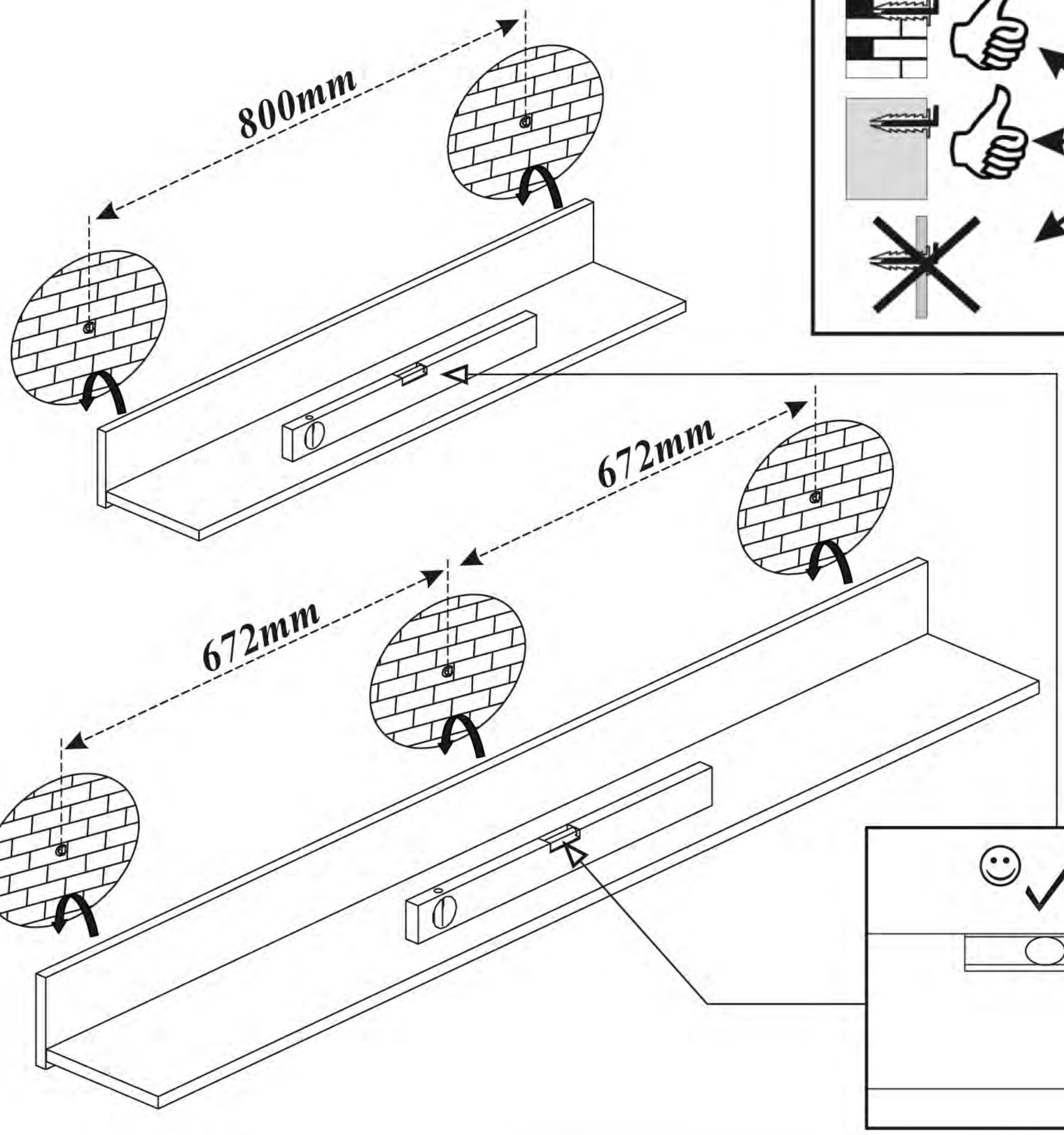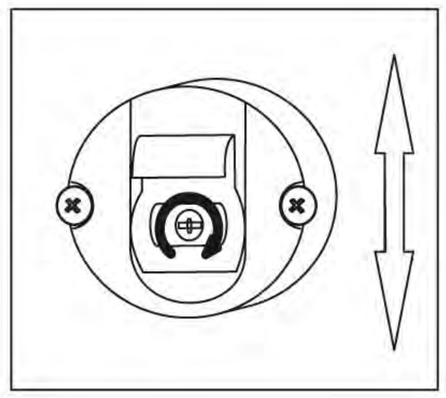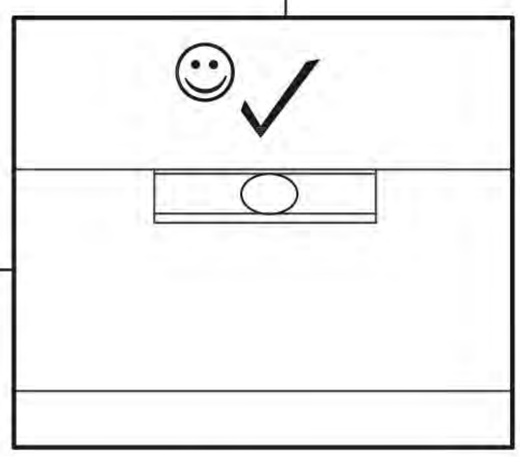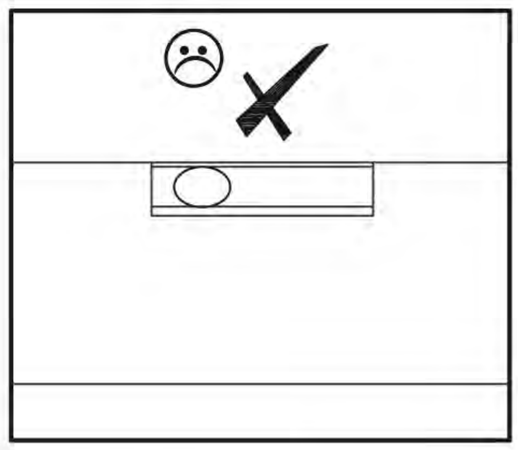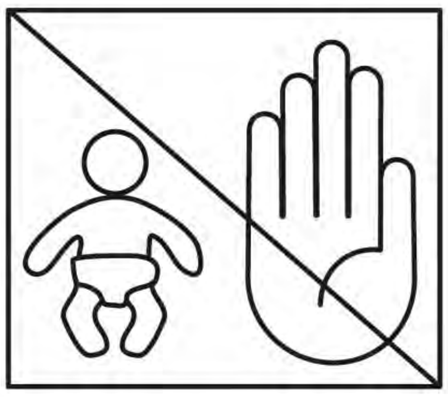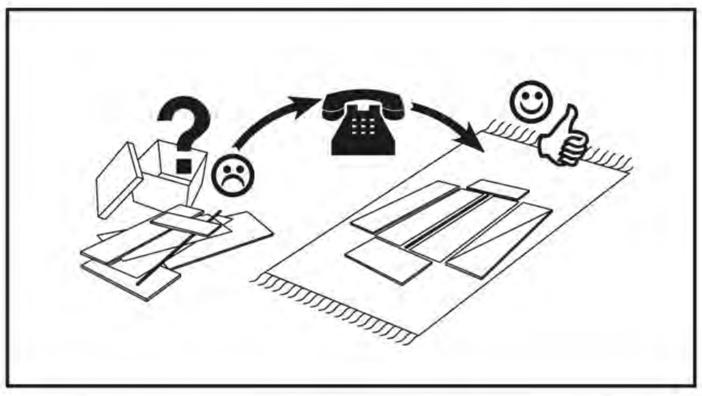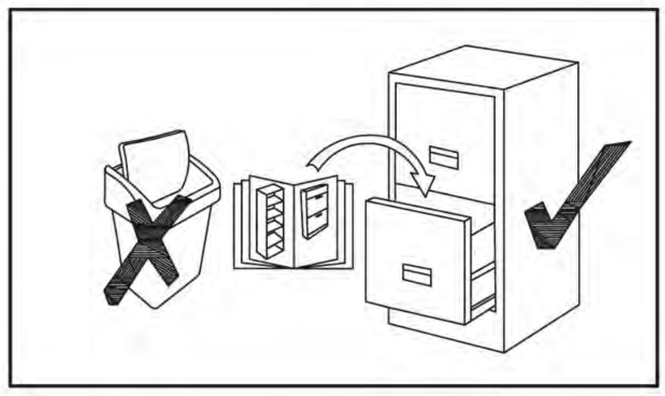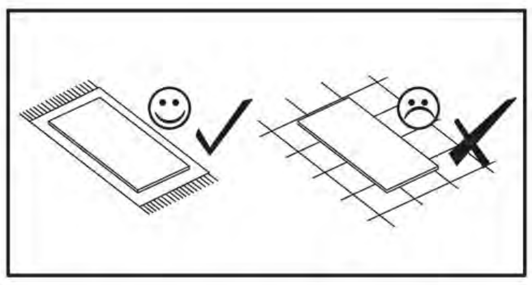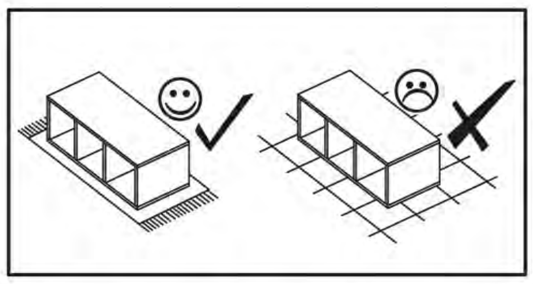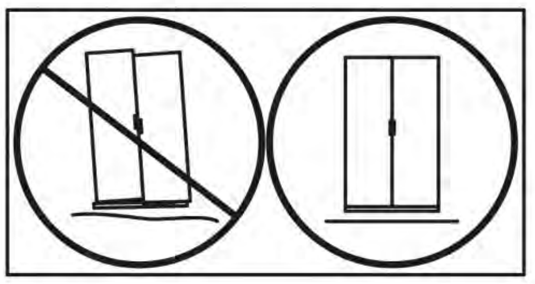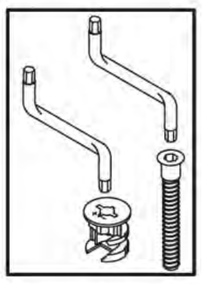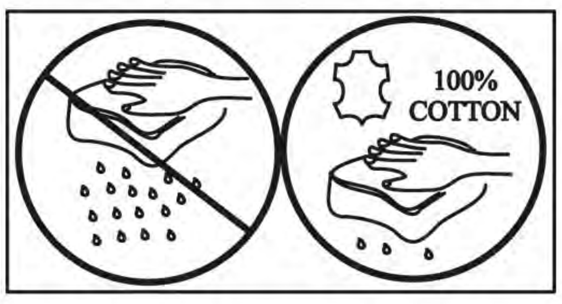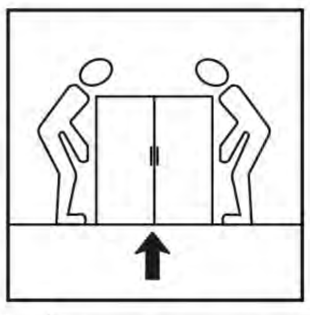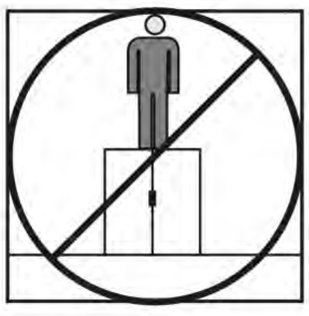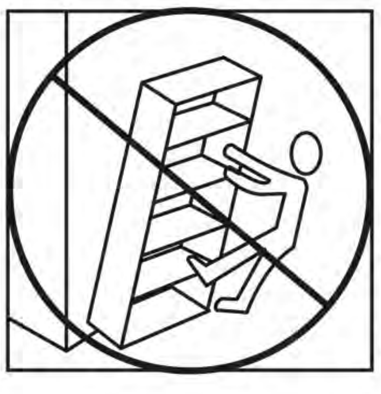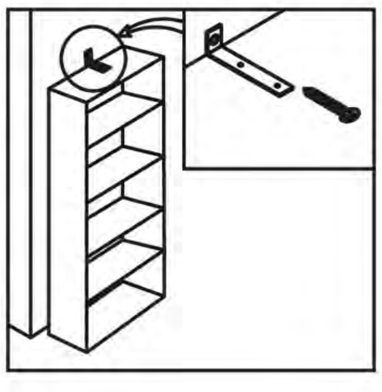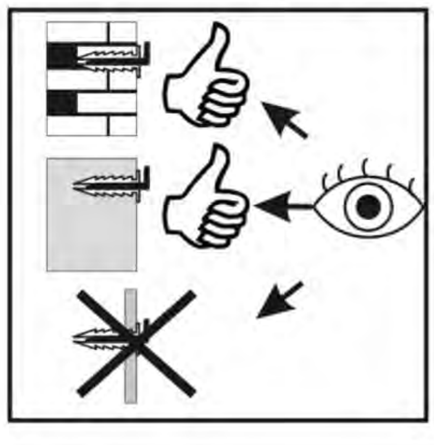
4